Building a better future
Global Leader

ISO 9001 REGISTERED
DNV
MGMT.SYS.
RvA C024
DNV Certification B.V., The Netherlands

Advanced Technology - Powerful Operation

HYUNDAI INVERTER hiRUN N300

HYUNDAI
HEAVY INDUSTRIES CO.,LTD.

Powerful Operation, Easy Maintenance

Hyundai Inverter – hiRUN N300

Powerful high torque performance has been accomplished using advanced sensorless vector control.
Powerful operation is possible for two motors at the same time.
Auto-tuning to perform sensorless vector control can now be easily done both on-line and off-line.
Versatile functions encompass more applications.
Field replacement of cooling fans and DC bus capacitors can be accomplished in a fraction of the time.

Model Name Indication

■ Model Name Indication

N300 - 055 L F

- N300: Series Name
- 055: Applicable Motor Capacity
  055 : 5.5 kW
  ~ ~
  1320 : 132kW
- L: Power Source
  L : 3-phase 200 V class
  H : 3-phase 400 V class
- F: With Digital Operator

■ Model Configuration

Applicable Motor Capacity in kW	3-phase 200 V class	3-phase 400 V class
5.5	N300-055LF	N300-055HF
7.5	N300-075LF	N300-075HF
11	N300-110LF	N300-110HF
15	N300-150LF	N300-150HF
18.5	N300-185LF	N300-185HF
22	N300-220LF	N300-220HF
30	N300-300LF	N300-300HF
37	N300-370LF	N300-370HF
45	N300-450LF	N300-450HF
55	N300-550LF	N300-550HF
75		N300-750HF
90		N300-900HF
110		N300-1100HF
132		N300-1320HF

Hyundai Inverter hiRUN N300

CONTENTS

Features 4
Standard Specifications 8
Dimensions 10
Operation and Programming 14
Function List 16
Terminals 25
Protective Functions 27
Connecting Diagram 28
Connecting to PLC 29
Wiring and Options 30
Torque Characteristics 36
Temperature Derating Characteristics 37
For Correct Operation 38

1 Powerful Operation with Advanced Sensorless Vector Control

Powerful high torque performance has been accomplished using HHI`s advanced sensorless vector control.

■ High starting torque of 200% or greater at 0.5 Hz

Torque Characteristics

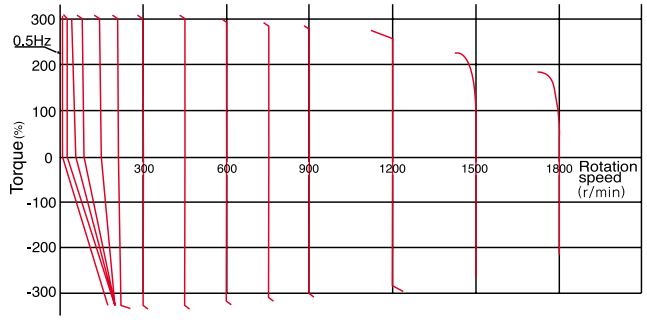

N300-055LF operating with HHI's 5.5kW 4-pole totally enclosed type motor.
<Base frequency of 60Hz>
(Note : Torque characteristics may vary according to capacity)

■ Rotational fluctuation at low speed has been drastically reduced to enhance process stability and precision.

- Inverter driving frequency : 3 Hz
- Motor : HHI's 5.5 kW 4-pole

Comparison of Rotational Fluctuation

N300-055LF

Rotational Fluctuation

J300-055LF5(Previous series)

Rotational Fluctuation

■ High torque of 150% at approximately 0 Hz

High torque of 150% at approximately 0 Hz is accomplished when N300 drives a smaller motor by one frame size.
Brake ON/OFF sequence can be easily integrated with this feature.

■ High torque multi-motor operation

Powerful operation is possible for two motors at the same time.
In the case of conventional sensorless vector control, only one motor can be controlled.
(Note : The two motors must be the same model and capacity)

High torque multi-operation with N300

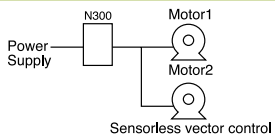

■ On-line/off-line auto-tuning

Auto-tuning to perform sensorless vector control can now be easily done both on-line and off-line.
On-line auto-tuning makes it possible for the motor characteristics to be updated automatically under "real time" ambient conditions.

Off-line auto tuning

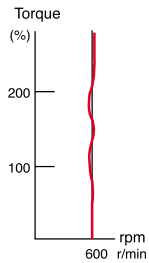

Torque characteristics after off-line auto-tuning [Output Frequency : 20 Hz] [Motor : Cold status]

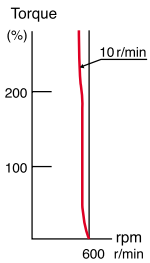

Torque characteristics after motor driving [Output Frequency : 20 Hz] [Motor : Hot status]

On line auto tuning

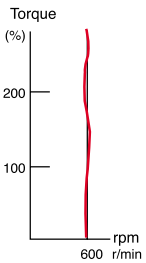

Torque characteristics after on-line auto-tuning [Output Frequency : 20 Hz] [Motor : Hot status]

2 Versatile Functions Encompass More Applications

■ Input / output function

- Intelligent terminal system is applied to both input and output terminals.
  Sink/source type logic selection is possible.
- In addition to the pulse output monitor, analog (current and voltage) output terminals-AM and AMI are added as standard.
  The example(right) shows how a follower inverter can directly receive the analog output of the master inverter as its frequency command.
- An auxiliary speed input or 'trim" can be made by an additional analog signal.

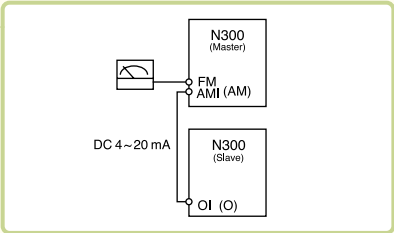

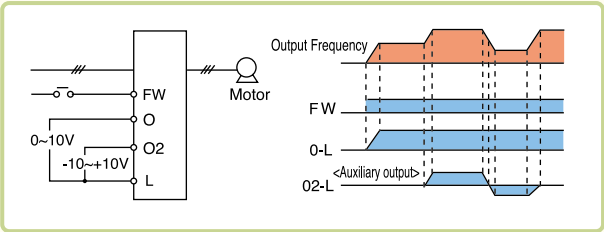

■ Third motor constants setting

Constants for up to three motors can be set.
This function is useful for controlling (multi-axis)motors via changeover.

■ Deceleration and stop at power failure

N300 decelerates and stops the motor using regenerative energy from the motor even though the power is not supplied. Especially critical in some textile processes.

■ Fan ON/OFF selection

The cooling fan operates while the inverter is running, and stops when the inverter stops.
This feature provides longer cooling fan life, and eliminates fan noise while the inverter is idle.

■ UP/DOWN function

Up/down function fine-tunes output frequency.
Convenient for a test-run.

■ PID operation

Helps simplify the system and save initial cost no need for external PID controller.
Useful for such applications as droop control.

■ Frequency scaling conversion

Display the output frequency scaled by the conversion factor for "line"/process speed.

■ 3-Wire function

"Seal-in" start signal without an external device.

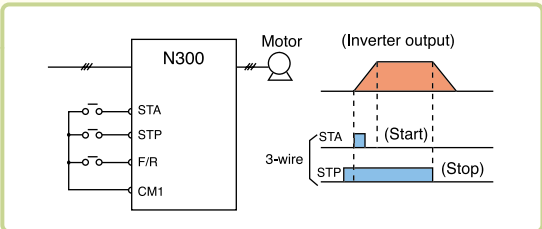

■ P · PI control selection

Provides stable control for carrier or trolley (material handling)operations.

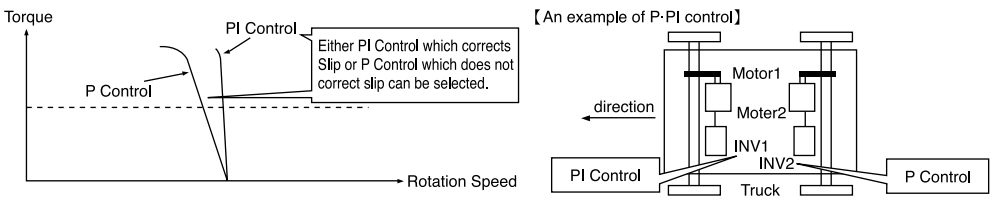

3 Easy Maintenance

■ Easy-removable cooling fan and DC bus capacitor

Field replacement of cooling fan(s) and DC bus capacitors can be accomplished in a fraction of the time.

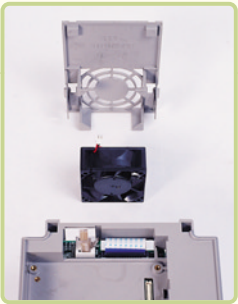

■ Removable control circuit terminals

Eliminates control rewiring when replacing the N300.

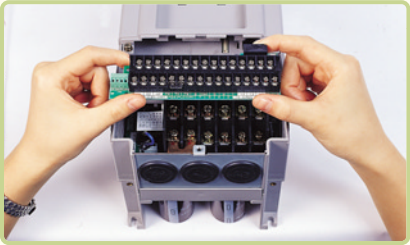

4 Environmental Friendliness

■ EMI filter

- EMI filters to meet European EMC and low voltage directives are available options for system conformance.

■ Reduced noise from control power supply

Noise terminal voltage of the control power supply has been improved by 20dB, resulting in significant reductions of noise interference with sensors and other peripheral devices.

Main circuit noise terminal voltage

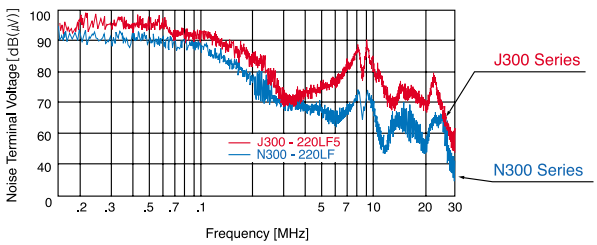

Control power supply noise terminal voltage
(L common or CM1 common)

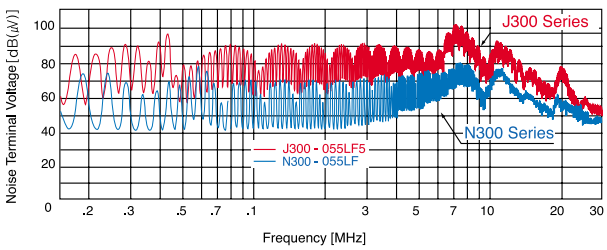

5 Easy Operation

■ Digital operator

Standard digital operator (OPE-N3) is removable for remote control, and has easy-to-see 4-digit display and LEDs to indicate the unit being monitored.

■ Built-in RS485

RS485 is provided as standard for ASCII serial communication.

■ User selection of command functions ("Quick Menu")

Frequently used commands can be selected and stored for quick reference.

■ Programming software

Optional PC drive configuration software which runs on Windows® operating system.

6 Protection for Various Installation Environments

Standard enclosure protection for N300 is IP20 (NEMA1) (IP00 : 75~132 kW).

7 Global Performance

■ Network compatibility

N300 can communicate with DeviceNet, PROFIBUS and LONWORKS as options.

Standard Specifications

200 V class

Model (N300-□□□LF)			055LF	075LF	110LF	150LF	185LF	220LF	300LF	370LF	450LF	550LF
Enclosure (*1)			IP20(NEMA1)									
Applicable motor (4 pole, kW) (*2)			5.5	7.5	11	15	18.5	22	30	37	45	55
Rated capacity(kVA)	200 V		8.3	11	15.9	22.1	26.3	32.9	41.9	50.2	63.0	76.2
	240 V		9.9	13.3	19.1	26.6	31.5	39.4	50.2	60.2	75.6	91.4
Rated output current(A) (*3)			3-phase, 200~240 V(±10%) 50 Hz / 60 Hz									
Rated input voltage(V)			3-phase, 200~240 V(According to supply voltage)									
Rated output current(A)			24	32	46	64	76	95	121	145	182	220
Control method			Line to line sine wave PWM									
Output frequency range (*4)			0.1 ~ 400 Hz									
Frequency accuracy			Digital: ±0.01% of maximum frequency, Analog: ±0.2%(25±10℃)									
Frequency resolution			Digital setting: 0.01 Hz, Analog setting(Maximum frequency)/ 4,000(O terminal: 12bit 0~10 V, O2 terminal: 12bit -10~+10 V)									
V/f characteristics			V/f free-setting(30~400 Hz of base frequency), Constant torque and reduced torque of V/f control, sensorless vector control									
Speed fluctuation			±0.5%(sensorless vector control)									
Overload capacity			150%/60sec, 200%/0.5sec									
Acceleration/deceleration time			0.01-3,600sec(Linear/curve, accel/decel, selection), Two-stage accel/decel									
Starting torque			200% at 0.5 Hz(Sensorless vector control), 150% at around 0 Hz(Sensorless vector control, with a motor one-size frame down)									
Braking	Dynamic braking(Short-time) (*5)		Built-in BRD circuit			External dynamic braking unit(option)						
	Minimum value of resistor(Ω)		17	17	17	-	-	-	-	-	-	-
	DC braking		Performs at start; under set frequency at deceleration, via an external input(braking force, time, and operating frequency)									
Input signals	Frequency setting	Operator	Set by △ key/▽key									
		External signal	DC 0~10 V, -10~+10 V(Input impedance 10 kΩ), 4~20mA(Input impedance 100 Ω)									
		External port	Set by RS 485									
	Forward/ Reverse Start/stop	Operator	Run key/Stop key(Change FW/RV by function command)									
		External signal	FW RUN/STOP(NO contact), RV set by terminal assignment(NO/NC selection), 3-wire input possible									
		External port	Set by RS 485									
	Intelligent input terminals		Selection of 8 function from: RV(Reverse), CF1-CF4(Multispeed command), JG(Jogging), DB(External DC braking), SET(Second motor constants setting), 2CH(Second accel./decel.), FRS(Free-run-stop), EXT(External trip), USP(Unattended start protection), CS(Change to/from commercial power supply), SFT(Software lock), AT(Analog input selection), SET3(Third motor constants setting), RS(Reset), STA(3-wire start), STP(s-wire stop), F/R(3-wire fwd./rev.), PID(PID On/Off), PIDC(PID reset), CAS(Control gain setting), UP/DWN(Remote-controlled accel./decel.), UDC(Remote-controlled data clearing), OPE(Operator control), SF1-SF7(Multispeed bit command 1-7), OLR(Overload limit change), TL(Torque limit change), TRQ1, TRQ2(Torque limit selection(1),(2)) PPI(P/PI selection), BOK(Brake verification), ORT(Orientation), LAC(LAD cancel), PCLR(Positioning deviation reset), STAT(90-degree phase difference permission), NO(NOT selected)									
	Thermistor input		One terminal(PTC characteristics)									
Output signals	Intelligent output terminals		Five open collector terminals and one NO-NC combined contact. Selection from: Run(Run signal), FA1(Frequency arrival signal(at the set frequency)), FA2(Frequency arrival signal(at or above the set frequency)), OL(Overload advance notice signal), OD(Output deviation for PID control), AL(Alarm signal), FA3(Frequency arrival signal(only at the set frequency)), OTQ(Over-torque), IP(Instantaneous power failure signal), UV(Under-voltage signal), TRQ(In torque limit), RNT(Operation time over), ONT(Plug in time over), THM(Thermal alarm), BRK(Brake release), BER(Brake error), ZS(Zero speed), Frequency arrival signal (at or above the set frequency(2)), Frequency arrival signal(only at the set frequency(2)), OL2(Overload advance notice signal(2)), (Terminal 11~13 or 11~14 are automatically configured as AC0~AC2 or AC0~AC3 when alarm code output is selected at C62.)									
	Intelligent monitor output terminals		Analog voltage, Analog current, Pulse line output									
Display monitor			Output frequency, Output current, Motor torque, Scaled value of output frequency, Trip history, I/O terminal condition, Input power, Output voltage									
Other functions			V/f free-setting(up to 5 points), Frequency upper/lower limit, Frequency jump, Accel./decel.curve selection, Manual torque boost value and frequency adjustment, Analog meter tuning, Start frequency setting, Carrier frequency setting, Electronic thermal free-setting, External frequency output zero/span reference, External frequency input bia start/end, Analog input selection, Retry after trip, Restart after instantaneous power failure, Various signal outputs, Reduced voltage start, Overload restriction, Default value setting, Deceleration and stop after power failure, AVR function, Fuzzy accel./decel., Auto-tuning(on-line/off line), High-torque multioperation									
Carrier frequency range			0.5~15 kHz									
Protective functions			Over current protection, Overload protection, Braking resistor overload protection, Over-voltage protection, EEPROM error, Under-voltage error, CT(current transformer)error, CPU error, External trip, USP error, Ground fault, Input overvoltage protection, Instantaneous power failure, Option 1 connection error, Option 2 connection error, Inverter thermal trip, Phase failure detection, IGBT error, Thermistor error									
Environmental conditions	Ambient operating/storage temperature(*6) / humidity		-10~50℃ / -20~65℃/25~90%RH (Non-condensing)									
	Vibration (*7)		5.9 m/s²(0.6G), 10~55 Hz						2.9 m/s²(0.3G), 10~55 Hz			
	Location		Less than 1,000m of altitude, Indoors(no corrosive gas nor dust)									
Color			Gray									
Options	Options		Feedback PCB(Vector control with sensor), 4-digit BCD, 16-bit binary, DeviceNet PCB, Lonworks PCB									
	Others		EMI filters, Input/output reactors. DC reactors, Radio noise filters. Braking unit, Braking resistor, LCR filter									
Operator			OPE-N3(4-digit LED)/Option: NOP3(Remote operator)									
Weight(kg)			3.5	5	5	12	12	12	20	30	30	50

*1) The protection method conforms to JEM 1030 /NEMA(US)
*2) The applicable motor refers to HHI standard 3-phase motor(4 pole). To use other motors, be sure to prevent the rated motor current(50 Hz) from exceeding the rated output current of the inverter.
*3) The output voltage decreases as the main power supply voltage decreases except for the use of AVR function .
*4) To operate the motor beyond 50/60 Hz, please consult with the motor manufacturer about the maximum allowable rotation speed.
*5) Braking resistor is not integrated in the inverter. Please install optional braking resistor or dynamic braking unit when large control torque is required.
*6) Storage temperature refers to the temperature in transportaion.
*7) Conforms to the test method specified in JIS C0911(1984).

400 V class

Model (N300-□□□HF)			055HF	075HF	110HF	150HF	185HF	220HF	300HF	370HF	450HF	550HF	750HF	900HF	1100HF	1320HF
Enclosure (*1)			IP20(NEMA1)										IP00			
Applicable motor (4 pole, kW) (*2)			5.5	7.5	11	15	18.5	22	30	37	45	55	75	90	110	132
Rated capacity(kVA)	400 V		8.3	11	15.9	22.1	26.3	33.2	40.1	51.9	62.3	76.2	103.2	121.9	150.3	180.1
	480 V		9.9	13.3	19.1	26.6	31.5	39.9	48.2	62.3	74.8	91.4	123.8	146.3	180.4	216.1
Rated output current(A) (*3)			3-phase, 380~480 V(±10%) 50 Hz / 60 Hz													
Rated input voltage(V)			3-phase, 380~480 V(According to supply voltage)													
Rated output current(A)			12	16	23	32	38	48	58	75	90	110	149	176	217	260
Control method			Line to line sine wave PWM													
Output frequency range (*4)			0.1 ~ 400 Hz													
Frequency accuracy			Digital: ±0.01% of maximum frequency, Analog: ±0.2%(25±10℃)													
Frequency resolution			Digital setting: 0.01 Hz, Analog setting(Maximum frequency)/4,000(O terminal: 12bit 0~10 V, O2 terminal: 12bit -10~+10 V)													
V/f characteristics			V/f free-setting(30~400 Hz of base frequency), Constant torque and reduced torque of V/f control sensorless vector control													
Speed fluctuation			±0.5%(Sensorless vector control)													
Overload capacity			150%/60sec, 200%/0.5sec										150%/60sec, 180%/0.5sec			
Acceleration/deceleration time			0.01~3,600sec(Linear/curve, accel./decel., selection), Two-stage accel./decel.													
Starting torque			200% at 0.5 Hz(Sensorless vector control), 150% at around 0 Hz(Sensorless vector control, with a motor one-size frame down)													
Braking	Dynamic braking(Short-time) (*5)		Built-in BRD circuit			External dynamic braking unit(option)										
	Minimum value of resistor(Ω)		70	50	50	-	-	-	-	-	-	-	-	-	-	-
	DC braking		Performs at start; under set frequency at deceleration, or via an external input(braking force, time, and operating frequency)													
Input signals	Frequency setting	Operator	Set by △ key/▽key													
		External signal	DC 0~10 V, -10~+10 V(Input impedance 10 kΩ), 4~20mA(Input impedance 100 Ω)													
		External port	Set by RS 485													
	Forward/ Reverse Start/Stop	Operator	Run key/Stop key(Change FW/RV by function command)													
		External signal	FW RUN/STOP(NO contact), RV set by terminal assignment(NO/NC selection), 3-wire input possible													
		External port	Set by RS 485													
	Intelligent input terminals		Selection of 8 function from RV(Reverse), CF1-CF4(Multispeed command), JG(Jogging), DB(External DC braking), SET(Second motor constants setting), 2CH(Second accel/decel), FRS(Free-run-stop), EXT(External trip), USP(Unattended start protection), CS(Change to/from commercial power supply), SFT(Software lock), AT(Analog input selection), SET3(Third motor constants setting), RS(Reset), STA(3-wire start), STP(s-wire stop), F/R(3-wire fwd./rev.), PID(PID On/Off), PIDC(PID reset), CAS(control gain setting), UP/DWN(Remote-controlled accel./decel), UDC(Remote-controlled data clearing), OPE(Operator control), SF1-SF7(Multispeed bit command 1-7), OLR(Overload limit change), TL(Torque limit change), TRQ1, TRQ2(Torque limit selection (1),(2)), PPI(P/PI selection), BOK(Brake verification), ORT(Orientation), LAC(LAD cancel), PCLR(Positioning deviation reset), STAT(90-degree phase difference permission), NO(NOT selected)													
	Thermistor input		One terminal(PTC characteristics)													
Output signals	Intelligent output terminals		Five open collector terminals and one NO-NC combined contact. Selection from Run(Run signal), FA1(Frequency arrival signal(at the set frequency)), FA2(Frequency arrival signal(at or above the set frequency)), OL(Overload advance notice signal), OD(Output deviation for PID control), AL(Alarm signal), FA3(Frequency arrival signal(only at the set frequency)), OTQ(Over-torque), IP(Instantaneous power failure signal), UV(Under-voltage signal), TRQ(In torque limit), RNT(Operation time over), ONT(Plug in time over), THM(Thermal alarm), BRK(Brake release), BER(Brake error), ZS(Zero speed), FA4(Frequency arrival signal) (At or above the set frequency(2)), FA5(Frequency arrival signal) (Only at the set frequency(2)), OL2(Overload advance notice signal(2)), (Terminal 11~13 or 11~14 are automatically configured as AC0~AC2 or AC0~AC3 when alarm code output is selected at C62.)													
	Intelligent monitor output terminals		Analog voltage, Analog current, Pulse line output													
Display monitor			Output frequency, Output current, Motor torque, Scaled value of output frequency, Trip history, I/O terminal condition, Input power, Output voltage													
Other functions			V/f free-setting(up to 5 points), Frequency upper/lower limit, Frequency jump, Accel./decel.curve selection, Manual torque boost value and frequency adjustment, Analog meter tuning, Start frequency setting, Carrier frequency setting, Electronic thermal free-setting, External frequency output zero/span reference, External frequency input bia start/end, Analog input selection, Retry after trip, Restart after instantaneous power failure, Various signal outputs, Reduced voltage start, Overload restriction, Default value setting, Deceleration and stop after power failure, AVR function, Fuzzy accel./decel, Auto-tuning(on-line/off line), High-torque multioperation													
Carrier frequency range			0.5~15 kHz													
Protective functions			Over current protection, Overload protection, Braking resistor overload protection, Over-voltage protection, EEPROM error, under-voltage error, CT(current transformer)error, CPU error, External trip, USP error, Ground fault, Input overvoltage protection, Instantaneous power failure, Option 1 connection error, Option 2 connection error, Inverter thermal trip, Phase failure detection, IGBT error, Thermistor error													
Environmental Conditions	Ambient operating/storage temperature(*6) / humidity		-10~50℃ / -20~65℃/25~90%RH (Non-condensing)													
	Vibration (*7)		5.9 m/s²(0.6G), 10~55 Hz						2.9 m/s²(0.3G), 10~55 Hz							
	Location		Less than 1,000m of altitude, Indoors(no corrosive gas nor dust)													
Color			Gray													
Options	Options		Feedback PCB(Vector control with sensor), 4-digit BCD, 16-bit binary, DeviceNet PCB, Lonworks PCB													
	Others		EMI filters, Input/output reactors, DC reactors, Radio noise filters, Braking unit, Braking resistor, LCR filter													
Operator			OPE-N3(4-digit LED)/Option: NOP3(Remote operator)													
Weight(kg)			3.5	5	5	12	12	12	20	30	30	30	60	60	80	80

*1) The protection method conforms to JEM 1030 /NEMA(US)
*2) The applicable motor refers to HHI standard 3-phase motor(4 pole). To use other motors, be sure to prevent the rated motor current(50 Hz) from exceeding the rated output current of the inverter.
*3) The output voltage decreases as the main power supply voltage decreases except for the use of AVR function .
*4) To operate the motor beyond 50/60 Hz, please consult with the motor manufacturer about the maximum allowable rotation speed.
*5) Braking resistor is not integrated in the inverter. Please install optional braking resistor or dynamic braking unit when large control torque is required.
*6) Storage temperature refers to the temperature in transportaion.
*7) Conforms to the test method specified in JIS C0911(1984).

Dimensions

N300 - 055LF / 055HF

Unit: mm(inch)

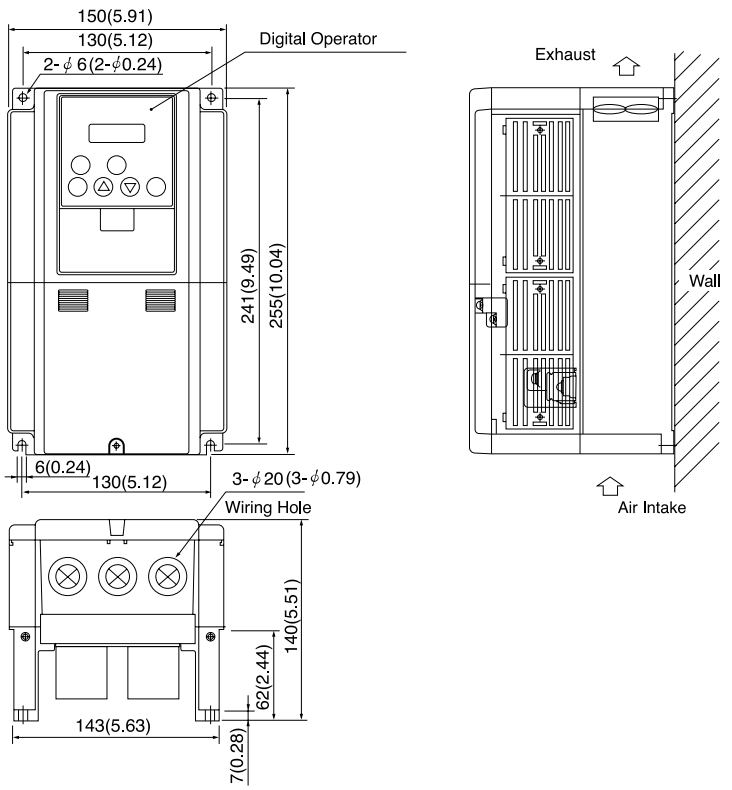

N300 - 075~110LF / HF

Unit: mm(inch)

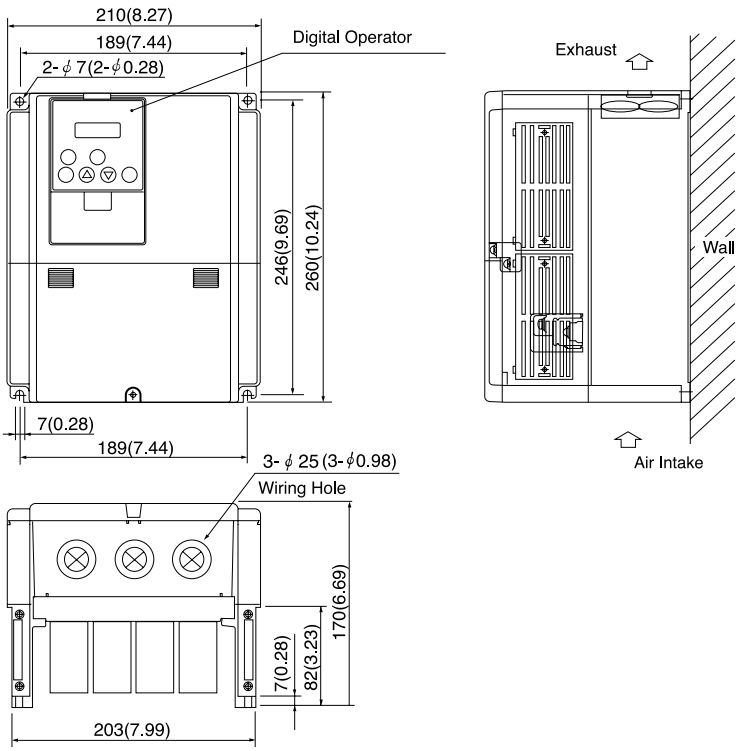

N300 - 150~220LF / HF

Unit: mm(inch)

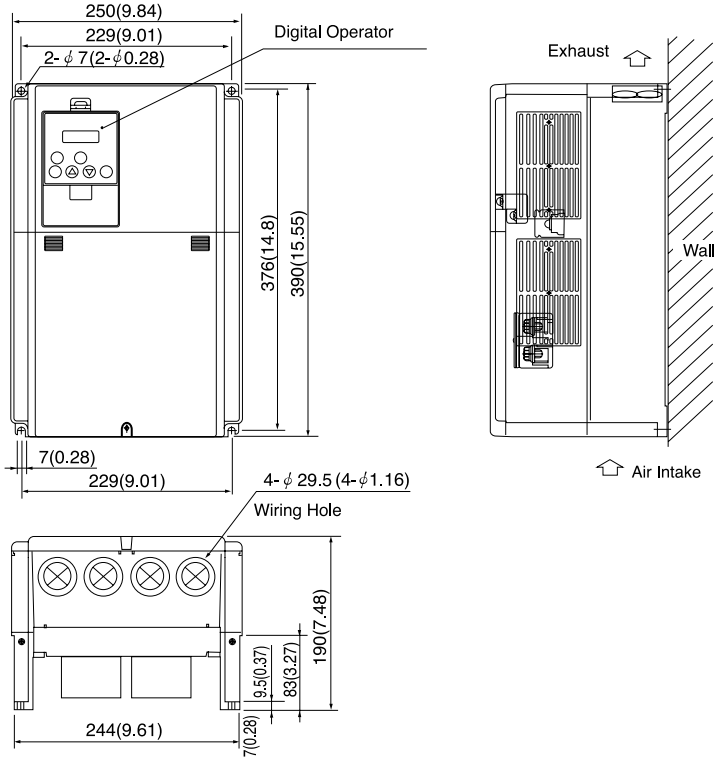

N300 - 300LF / HF

Unit: mm(inch)

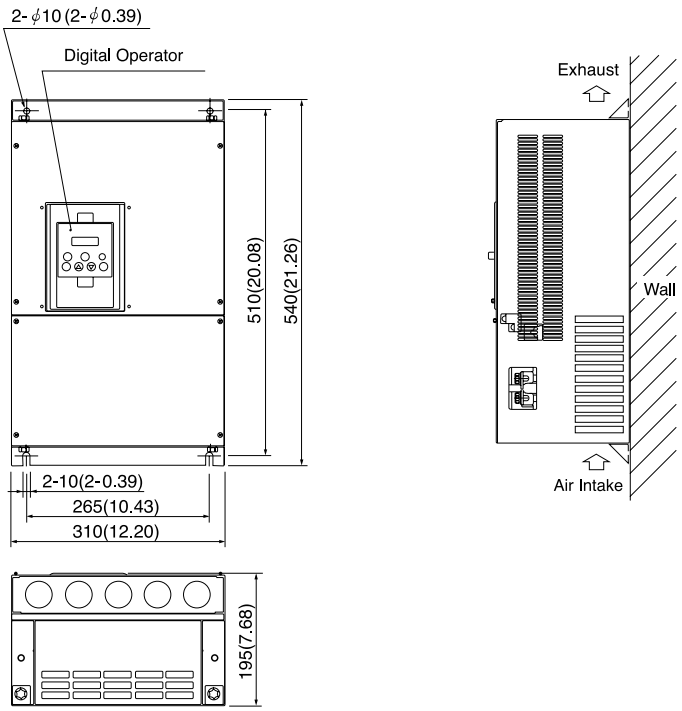

Dimensions

N300 - 370~450LF, 370~550HF

Unit: mm(inch)

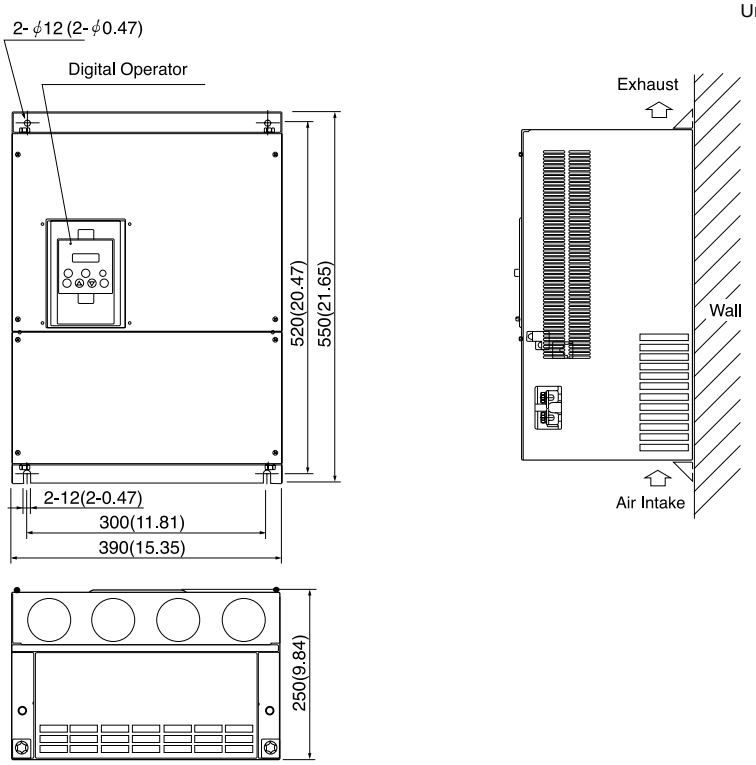

N300 - 550LF

Unit: mm(inch)

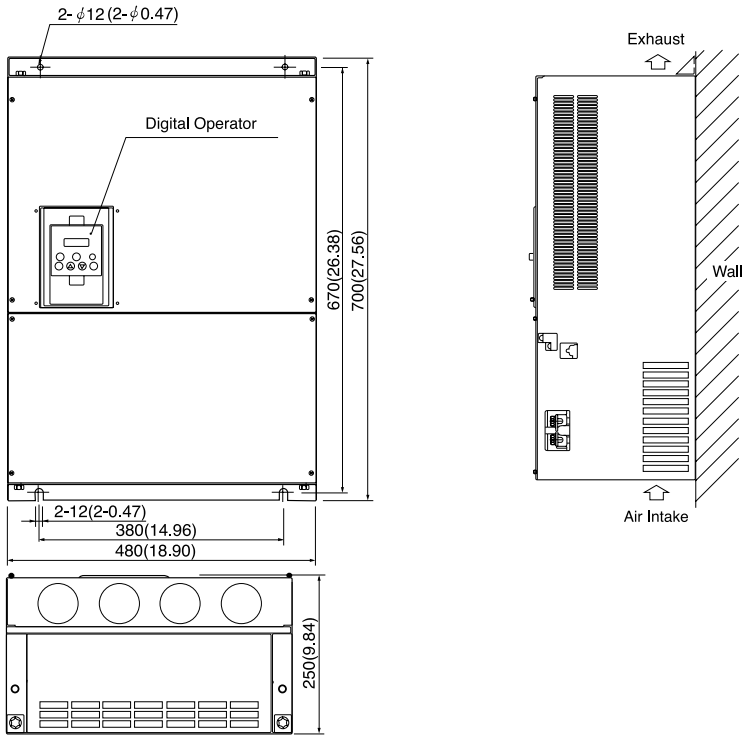

N300 - 750HF, 900HF

Unit: mm(inch)

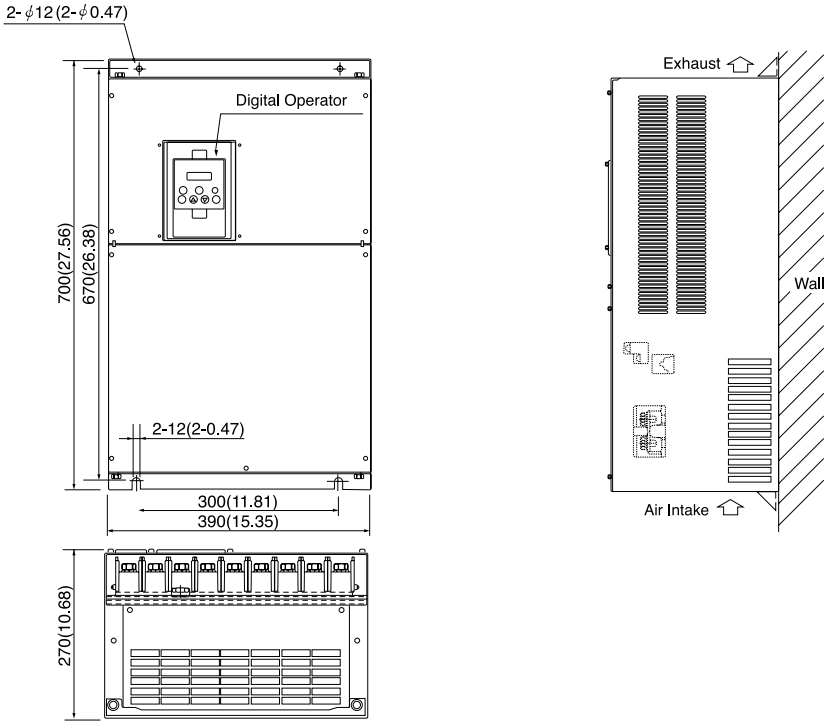

N300 - 1100HF, 1320HF

Unit: mm(inch)

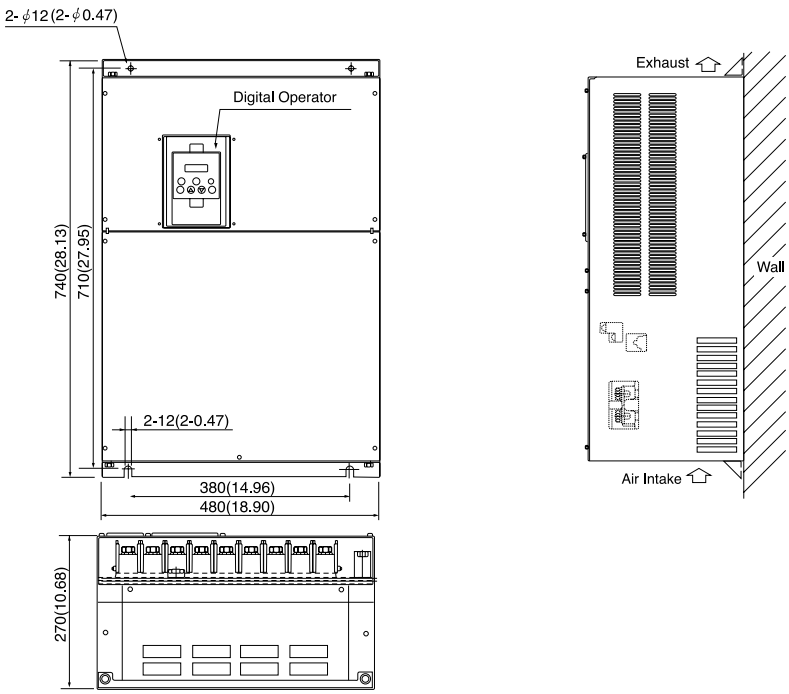

N300 Series can be easily operated with the digital operator (OPE-N3) provided as standard. The digital operator can also be detached and can be used for remote-control.

■ Digital Operator (OPE-N3) Specification

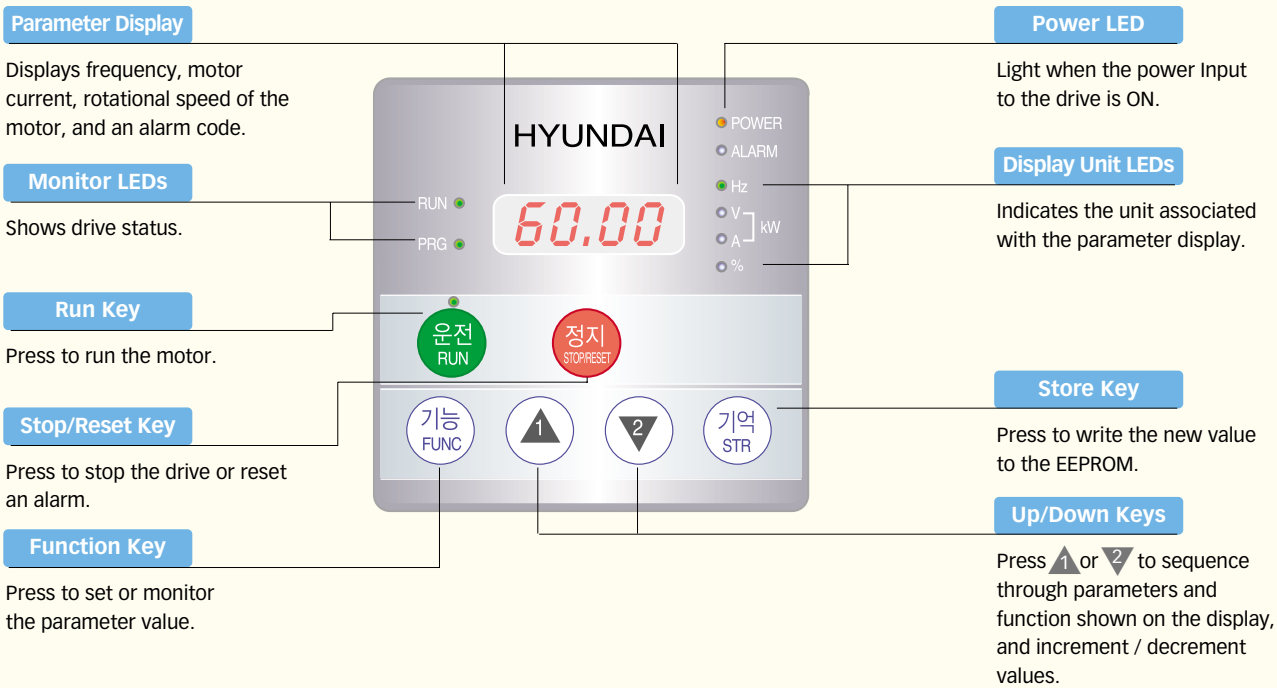

■ Setting the Maximum Output Frequency

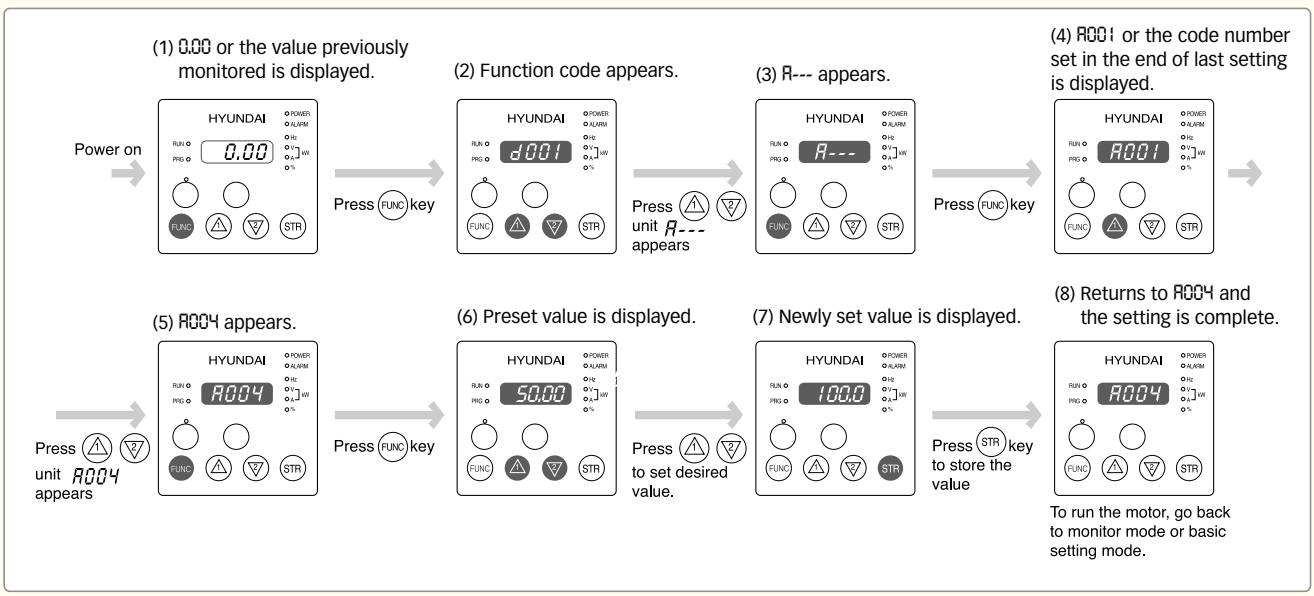

■ Remote Operator NOP3 (Option)

■ Dimensions

[Unit: mm]

● OPE-N3

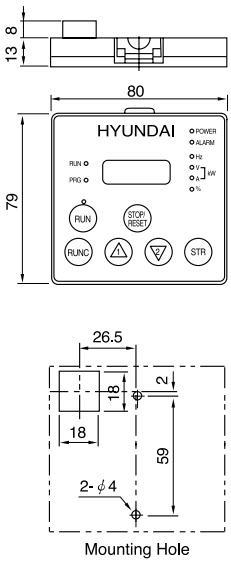

● NOP3

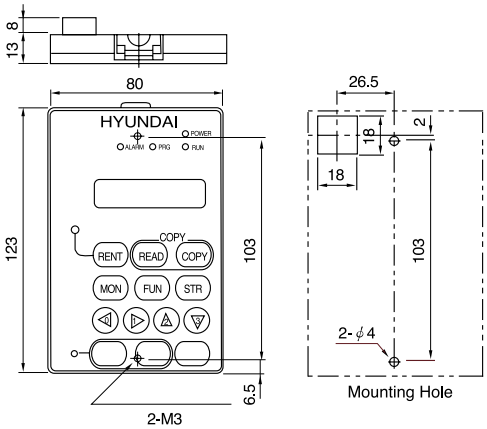

● NOP3-1A, 3A
(Cables for OPE-N3 and NOP3)

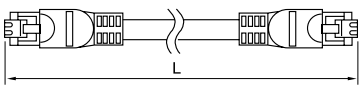

Type	Cable length
NOP3-1A	1.5 m
NOP3-3A	3 m

- Change mode during run by selection of b031 (software lock selection)
- Do not forget to press "STR" key when you change the display.

■ Monitor Mode and Standard Setting Mode

○ = Allowed
× = Not permitted

	Code	Name	Description	Default setting	Run-time setting	Run-time data edit
Monitor mode	d001	Output frequency monitor	0.00~99.99/100.0~400.0 Hz	-	-	-
	d002	Output current monitor	0.0~999.9	-	-	-
	d003	Motor rotational direction monitor	F(Forward)/O(Stop)/r(Reverse)	-	-	-
	d004	PID feedback monitor	0.00~99.99/ 100.0~999.9/ 1000.~9999./ 1000~9999/ 「100~「999	-	-	-
	d005	Intelligent input terminal Condition monitor	(Example) FW, terminal 7, 2, 1: ON Terminal 8, 6, 5, 4, 3: OFF	-	-	-
	d006	Intelligent output terminal Condition monitor	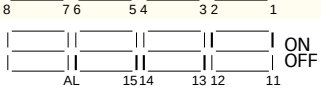 (Example) Terminal 12, 11: ON AL 15, 14, 13: OFF	-	-	-
	d007	Output frequency scaled value monitor	0.00~99.99/ 100.0~999.9/ 1000.~9999./ 1000~3996	-	-	-
	d012	Torque monitor	-300~+300%	-	-	-
	d013	Output voltage monitor	0.0~600.0 V	-	-	-
	d014	Input electric power monitor	0.00~999.9 kW	-	-	-
	d016	Accumulated time monitor during run	0.~9999./ 1000.~9999./ 1000~9999/ 「100~「999 hr	-	-	-
	d017	Power on time monitor	0.~9999./ 1000.~9999./ 1000~9999/ 「100~「999 hr	-	-	-
	d080	Trip count monitor	0.~9999./ 1000~6553(10,000~65,530)(times)	-	-	-
	d081 ~d086	Trip monitor 1~6	Trip code, Frequency(Hz), Current(A), Voltage(V), Run time (hr) power on time(hr)	-	-	-
	d090	Warning monitor	Warning code	-	-	-
Setting mode	F001	Output frequency setting	0.0Hz, Starting frequency to maximum frequency(2nd max, 3rd max frequency)	0.00	○	○
	F002	Acceleration time(1) setting	0.01~99.99, 100.0~999.9, 1000.~3600. sec	30.00	○	○
	F202	Acceleration time(1) setting for second motor	0.01~99.99, 100.0~999.9, 1000.~3600. sec	30.00	○	○
	F302	Acceleration time(1) setting for third motor	0.01~99.99, 100.0~999.9, 1000.~3600. sec	30.00	○	○
	F003	Deceleration time(1) setting	0.01~99.99, 100.0~999.9, 1000.~3600. sec	30.00	○	○
	F203	Deceleration time(1) setting for second motor	0.01~99.99, 100.0~999.9, 1000.~3600. sec	30.00	○	○
	F303	Deceleration time(1) setting for third motor	0.01~99.99, 100.0~999.9, 1000.~3600. sec	30.00	○	○
	F004	Motor rotational direction setting	00(Forward)/01(Reverse)	00	×	×
Expanded function	A- - -	To expanded function A(Basic functions)				
	b- - -	To expanded function b(Protective functions and fine tuning function)				
	C- - -	To expanded function C(Terminal setting functions)				
	H- - -	To expanded function H(Motor constants setting functions)				
	P- - -	To expanded function P(Option setting functions)				
	U- - -	To expanded function U(User`s selection functions)				

■ Expanded Function A

○ = Allowed
× = Not permitted

	Code	Name	Description	Default setting	Run-time setting	Run-time data edit
Basic setting	A001	Frequency command	01(Terminals)/ 02(Operator)/ 03(RS485)/ 04(Option 1) / 05(Option 2)	02	×	×
	A002	Run command	01(Terminals)/ 02(Operator)/ 03(RS485)/ 04(Option 1)/ 05(Option 2)	02	×	×
	A003	Base frequency setting	30. -Maximum frequency(Hz)	60.	×	×
	A203	Base frequency setting for second motor	30. -Maximum frequency for second motor(Hz)	60.	×	×
	A303	Base frequency setting for third motor	30. -Maximum frequency for third motor(Hz)	60.	×	×
	A004	Maximum frequency setting	30.~400. Hz	60.	×	×
	A204	Maximum frequency setting for second motor	30.~400. Hz	60.	×	×
	A304	Maximum frequency setting for third motor	30.~400. Hz	60.	×	×
Analog input setting	A005	Analog input setting	00(Selection between O and OI at AT) / 01(Selection between O and O2 at AT)	00	×	×
	A006	O2 selection	00(Independent)/ 01(Only positive)/ 02(Both positive and negative)	00	×	×
	A011	External frequency output zero reference	0.00~400.0 Hz	0.00	×	○
	A012	External frequency output span reference	0.00~400.0 Hz	0.00	×	○
	A013	External frequency input bias start	0~100%	0.	×	○
	A014	External frequency input bias end	0~100%	100.	×	○
	A015	External frequency offset enable	00(External frequency output zero reference)/ 01(0 Hz)	01	×	○
	A016	External frequency filter time constant	1-30(Sampling time=2msec)	8.	×	○
Multispeed and jogging frequency setting	A019	Multispeed operation setting selection	00(Binary: up to 16-stage speed at 4 terminals)/ 01(Bit: up to 8-stage speed at 7 terminals)	00	×	×
	A020	Multispeed frequency setting (0)	0.0, Starting frequency to maximum frequency(Hz)	0.00	○	○
	A220	Multispeed frequency setting(0) for second motor	0.0, Starting frequency to maximum frequency for second motor(Hz)	0.00	○	○
	A320	Multispeed frequency setting(0) for third motor	0.0, Starting frequency to maximum frequency for third motor(Hz)	0.00	○	○
	A021~A035	Multispeed frequency setting (1~15)	0.0, Starting frequency to maximum frequency(Hz)	0.00	○	○
	A038	Jogging frequency setting	0.0, Starting frequency to 9.99 Hz	1.00	○	○
	A039	Jog stop mode selection	00(Free-run stop/ disabled during operation)/ 01(Controlled deceleration/ disabled during operation)/ 02(DC braking to stop/ disabled during operation)/ 03(Free-run on jog stop/ enabled during operation)/ 04(Controlled deceleration /enabled during operation)/ 05(DC braking on jog stop/ enabled during operation)	00	×	○
V/f characteristics	A041	Torque boost method selection	00(Manual torque boost)/ 01(Automatic torque boost)	00	×	×
	A241	Torque boost method selection for second motor	00(Manual torque boost)/ 01(Automatic torque boost)	00	×	×
	A042	Manual torque boost value	0.0~20.0%	1.0	○	○
	A242	Manual torque boost value for second motor	0.0~20.0%	1.0	○	○
	A342	Manual torque boost value for third motor	0.0~20.0%	1.0	○	○
	A043	Manual torque boost frequency adjustment	0.0~50.0%	5.0	○	○
	A243	Manual torque boost frequency adjustment for second motor	0.0~50.0%	5.0	○	○
	A343	Manual torque boost frequency adjustment for third motor	0.0~50.0%	5.0	○	○
	A044	V/f characteristic curve selection	00(VC)/ 01(VP 1.7 POWER)/ 02(V/f free-setting)/ 03(SLV)/ 04(SLV at around 0 Hz)/ 05(V2)	00	×	×
	A244	V/f characteristic curve selection for second motor	00(VC)/ 01(VP 1.7 POWER)/ 02(V/f free-setting)/ 03(SLV)/ 04(SLV at around 0 Hz)	00	×	×
	A344	V/f characteristic curve selection for third motor	00(VC)/ 01(VP 1.7 POWER)	00	×	×
	A045	Output voltage gain	20.~100.	100.	○	○
DC braking	A051	DC braking enable	00(Disabled)/ 01(Enabled)	00	×	○
	A052	DC braking frequency setting	0.00~60.00 Hz	0.50	×	○
	A053	DC braking wait time	0.0~5.0sec	0.0	×	○
	A054	DC braking force setting	0.0~100%	0.	×	○
	A055	DC braking time setting	0.00~60.0sec	0.0	×	○
	A056	DC braking edge/ level selection	00(Edge)/ 01(Level)	01	×	○
	A057	DC braking force setting at the starting point	0.0~100% <0.0~80%>[1)]	0.	×	○
	A058	DC braking time setting at the starting point	0.0~60.0sec	0.0	×	○
	A059	DC braking carrier frequency setting	0.5~15 kHz Derating <0.5~10 kHz>[1)]	5.0	×	×

※ 1) < > 75~132kW

■ Expanded Function A

○ = Allowed
× = Not permitted

	Code	Name	Description	Default setting	Run-time setting	Run-time data edit
Frequency upper/ lower limit & jump frequency	A061	Frequency upper limit setting	0.0, Starting frequency to maximum frequency(Hz)	0.00	×	○
	A261	Frequency upper limit setting for second motor	0.0, Starting frequency to maximum frequency for second motor(Hz)	0.00	×	○
	A062	Frequency lower limit setting	0.0, Starting frequency to maximum frequency(Hz)	0.0	×	○
	A262	Frequency lower limit setting for second motor	0.0, Starting frequency to maximum frequency for second motor(Hz)	0.00	×	○
	A063	Jump frequency(1) setting	0.00~99.99/ 100.0~400.0 Hz	0.00	×	○
	A064	Jump frequency width(1) setting	0.00~10.00 Hz	0.50	×	○
	A065	Jump frequency(2) setting	0.00~99.99/ 100.0~400.0 Hz	0.00	×	○
	A066	Jump frequency width(2) setting	0.00~10.00 Hz	0.50	×	○
	A067	Jump frequency(3) setting	0.00~99.99/ 100.0~400.0 Hz	0.00	×	○
	A068	Jump frequency width(3) setting	0.00~10.00 Hz	0.50	×	○
	A069	Acceleration hold frequency setting	0.00~99.99/ 100.0~400.0 Hz	0.00	×	○
	A070	Acceleration stop time setting	0.00~60.0sec	0.0	×	○
PID control	A071	PID function enable	00(Disabled) / 01(Enabled)	00	×	○
	A072	PID proportional gain	0.2~5.0	1.0	○	○
	A073	PID integral gain	0.0~3600.0sec	1.0	○	○
	A074	PID differential gain	0.0~100.0sec	0.0	○	○
	A075	PID scale	0.01~99.99	1.0	×	○
	A076	PID feedback selection	00(Feedback at OI)/ 01(Feedback at O)	00	×	○
AVR	A081	AVR function selection	00(Always on)/01(Always off)/ 02(Off during deceleration)	02	×	×
	A082	Motor voltage selection	200/ 215/ 220/ 230/ 240, 380/ 400/ 415/ 440/ 460/ 480 V	200/ 400	×	×
Operation mode and accel./ decel. function	A085	Operation mode selection	00(Normal operation)/ 01(Energy-saving operation)/ 02 (Fuzzy operation)	00	×	×
	A086	Optimal energy savings capture rate	0.0~100.0sec	50.0	○	○
	A092	Acceleration time(2)	0.01~99.99/ 100.0~999.9/ 1000~3600sec	15.00	○	○
	A292	Acceleration time(2) for second motor	0.01~99.99/ 100.0~999.9/ 1000~3600sec	15.00	○	○
	A392	Acceleration time(2) for third motor	0.01~99.99/ 100.0~999.9/ 1000~3600sec	15.00	○	○
	A093	Deceleration time(2)	0.01~99.99/ 100.0~999.9/ 1000~3600sec	15.00	○	○
	A293	Deceleration time(2) for second motor	0.01~99.99/ 100.0~999.9/ 1000~3600sec	15.00	○	○
	A393	Deceleration time(2) for third motor	0.01~99.99/ 100.0~999.9/ 1000~3600sec	15.00	○	○
	A094	Selection method to use second accel./decel.	00(2CH input from terminal)/ 01(Transition frequency)	00	×	×
	A294	Selection method to use second accel./decel. for second motor	00(2CH input from terminal)/ 01(Transition frequency)	00	×	×
	A095	Accel.(1) to accel.(2) frequency transition point	0.00~99.99/ 100.0~400.0 Hz	0.00	×	×
	A295	Accel.(1) to accel.(2) frequency transition point for second motor	0.00~99.99/ 100.0~400.0 Hz	0.00	×	×
	A096	Decel.(1) to decel.(2) frequency transition point	0.00~99.99/ 100.0~400.0 Hz	0.00	×	×
	A296	Decel.(1) to decel.(2) frequency transition point for second motor	0.00~99.99/ 100.0~400.0 Hz	0.00	×	×
	A097	Acceleration curve selection	00(Linear)/ 01(S-curve)/ 02(U-shape)/ 03(Reserved U-shape)	00	×	×
	A098	Deceleration curve selection	00(Linear)/ 01(S-curve)/ 02(U-shape)/ 03(Reserved U-shape)	00	×	×
External frequency tuning	A101	External frequency output zero reference at OI	0.00~99.99/ 100.0~400.0 Hz	0.00	×	○
	A102	External frequency output span reference at OI	0.00~99.99/ 100.0~400.0 Hz	0.00	×	○
	A103	External frequency input bias start at OI	0.~100.%	20.	×	○
	A104	External frequency input bias end at OI	0.~100.%	100.	×	○
	A105	External frequency offset enable	00(External frequency output zero reference)/ 01(0 Hz)	01	×	○
	A111	External frequency output zero reference at O2	-400.0~400.0 Hz	0.00	×	○
	A112	External frequency output span reference at O2	-400.0~400.0 Hz	0.00	×	○
	A113	External frequency input bias start at O2	-100.~100.%	-100.	×	○
	A114	External frequency input bias end at O2	-100.~100.%	100.	×	○
Accel./ decel.	A131	Acceleration curve constants setting	01(Minimum)~10(Extreme)	02	×	○
	A132	Deceleration curve constants setting	01(Minimum)~10(Extreme)	02	×	○

■ Expanded Function b

○ = Allowed
× = Not permitted

	Code	Name	Description	Default setting	Run-time setting	Run-time data edit
Instantaneous power failure restart	b001	Selection of restart mode	00(Alarm)/ 01(Restart at 0 Hz)/ 02(Resume operation after frequency matching)/ 03(Resume previous frequency after frequency matching, then decelerate to stop and display trip information)	00	×	○
	b002	Allowable instantaneous power failure time	0.3~1.0 sec	1.0	×	○
	b003	Time delay enforced before motor restart	0.3~100.0 sec	1.0	×	○
	b004	Instantaneous power failure/ under-voltage trip enable	00(Disabled)/ 01(Enabled)/ 02(Disabled during stop and deceleration by stop command)	00	×	○
	b005	Number of restarts after instantaneous power failure and under-voltage trip	00(16 times)/ 01(Infinite)	00	×	○
	b006	Phase failure detection enable restart	00(Disabled)/ 01(Enabled)	00	×	○
	b007	Frequency setting	0.00~99.99/ 100.00~400.0 Hz	0.00	×	○
Electronic thermal	b012	Level of electronics thermal setting	0.2 X rated current ~ 1.2 X rated current	Rated current	×	○
	b212	Level of electronics thermal setting for second motor	0.2 X rated current ~ 1.2 X rated current	Rated current	×	○
	b312	Level of electronics thermal setting for third motor	0.2 X rated current ~ 1.2 X rated current	Rated current	×	○
	b013	Electronic thermal charateristics	00(Reduced characteristic)/ 01(Constant torque characteristic)/ 02(V/f free-setting)	00	×	○
	b213	Electronic thermal characteristics for second Motor	00(Reduced characteristic)/ 01(Constant torque characteristic)/ 02(V/f free-setting)	00	×	○
	b313	Electronic thermal characteristics for third motor	00(Reduced characteristic)/ 01(Constant torque characteristic)/ 02(V/f free-setting)	00	×	○
	b015	Free-setting electronic thermal frequency(1)	0.~400. Hz	0	×	○
	b016	Free-setting electronic thermal current(1)	0.0~1000.0 A	0.0	×	○
	b017	Free-setting electronic thermal frequency(2)	0.~400. Hz	0	×	○
	b018	Free-setting electronic thermal current(2)	0.0~1000.0 A	0.0	×	○
	b019	Free-setting electronic thermal frequency(3)	0.~400. Hz	0	×	○
	b020	Free-setting electronic thermal current(3)	0.0~1000.0 A	0.0	×	○
Overload limit	b021	Overload restriction operation mode	00(Disabled)/ 01(Enabled during accel./constant speed)/ 02(Enabled during constant speed)/ 03(Enabled on acceleration/constant speed(Speed increasing at regenerating mode)	01	×	○
	b022	Overload restriction setting	0.5 X rated current ~ 2.00 X rated current < ~1.80 X rated current >[1]	Rated currentX1.5	×	○
	b023	Deceleration rate at overload restriction	0.1~30.00 sec	1.00	×	○
	b024	Overload restriction operation mode(2)	00(Disabled)/ 01(Enabled during accel./ constant speed)/ 02(Enabled during constant speed)/ 03(Enabled on acceleration/ constant speed(Speed increasing at regenerating mode)	01	×	○
	b025	Overload restriction setting(2)	0.5 X rated current ~ 2.00 X rated current < ~1.80 X rated current >[1]	Rated currentX1.5	×	○
	b026	Deceleration rate at overload restriction(2)	0.1~30.00 sec	1.00	×	○
Lock	b031	Software lock mode selection	00(All parameters except b031 are locked when SFT from terminal is on)/ 01(All parameters except b031 and output frequency F001 are locked when SFT from terminal is on)/ 02(All parameters except b031 are locked)/ 03(All parameters except b031 and output frequency F001 are locked)/ 10(Runtime data edit mode)	01	×	○
Others	b034	Run time/ power on time level	0~6553(65,530hr) (Output to intelligent terminal)	0	×	○
	b035	Rotational direction restriction	00(Enabled for both directions)/ 01(Enabled for forward)/ 02(Enabled for reverse)	00	×	○
	b036	Reduced voltage soft start selection	00(Short)~06(Long)	06	×	○
	b037	Display selection	00(All)/ 01(Function group)/ 02(All including user's selection)	00	×	○
	b040	Torque limit selection	00(4-quadrant setting)/ 01(Terminal selection)/	00	×	○
			02(Analog O2 input)/ 03(Option(1))/ 04(Option(2))	00	×	○
	b041	Torque limit(1) (Forward-forcing in 4-quadrant mode)	0.~200.%/ no (Torque limit disabled) < 0.~180.%/ no (Torque limit disabled) >[1]	150.	×	○
	b042	Torque limit(2) (Reverse-regenerating in 4-quadrant mode)	0.~200.%/ no (Torque limit disabled) < 0.~180.%/ no (Torque limit disabled) >[1]	150.	×	○
	b043	Torque limit(3) (Reverse-forcing in 4-quadrant mode)	0.~200.%/ no (Torque limit disabled) < 0.~180.%/ no (Torque limit disabled) >[1]	150.	×	○
	b044	Torque limit(4) (Forward-regenerating in 4-quadrant mode)	0.~200.%/ no (Torque limit disabled) < 0.~180.%/ no (Torque limit disabled) >[1]	150.	×	○

※ 1) < > 75~132kW

■ Expanded Function b

○ = Allowed
× = Not permitted

	Code	Name	Description	Default setting	Run-time setting	Run-time data edit
Others	b045	Torque LAD-STOP enable	00(Disabled)/ 01(Enabled)	00	×	○
	b046	Reverse protection enable	00(Disabled)/ 01(Enabled)	00	×	○
	b050	Deceleration and stop after power failure enable	00(Disabled)/ 01(Enabled)	00	×	×
	b051	Starting voltage setting for deceleration and stop after power failure	0.0~1000. V	0.0	×	×
	b052	OV-LADSTOP level setting for deceleration and stop after power failure	0.0~1000. V	0.0	×	×
	b053	Deceleration time setting for deceleration and stop after power failure	0.01~99.99/ 100.0~999.9/ 1000.~3600.sec	1.00	×	×
	b054	Starting range of deceleration setting for deceleration and stop after power failure	0.00~10.00 Hz	0.00	×	×
	b080	AM terminal analog meter tuning	0.~255.	180	○	○
	b081	FM terminal analog meter tuning	0.~255.	60	○	○
	b082	Start frequency setting	0.10~9.99 Hz	0.50	×	○
	b083	Carrier frequency setting	0.5~15.0 kHz (When derated) < 0.5~10 kHz >[1)]	5.0	×	×
	b084	Initialization mode selection	00(Trip history clear)/ 01(Parameter initialization)/ 02(Trip history clear and parameter initialization)	00	×	×
	b085	Country code for initialization	00(Japanese version)/ 01(European version)/ 02(North American version)	00	×	×
	b086	Frequency scaling conversion factor	0.1~99.9	1.0	○	○
	b087	Stop key enable	00(Enabled)/ 01(Disabled)	00	×	○
	b088	Resume on free-run stop cancellation mode	00(Restart at 0 Hz)/ 01(Resume operation after frequency matching)	00	×	○
	b090	Dynamic braking usage ratio	0.0~100.0%	0.0	×	○
	b091	Stop mode selection	00(Deceleration and stop)/ 01(Free-run stop)	00	×	×
	b092	Cooling fan control	00(Fan is always ON)/ 01<Fan is ON during run, after power is ON, then for 5 minutes on stop is implied>[1)]	00	×	×
	b095	Dynamic braking control	00(Disabled)/ 01<Enabled during run>[1)]/ 02<Enabled>[1)]	00	×	○
	b096	Activation level of dynamic braking setting	330~380/ 660~760 V	360/720	×	○
	b098	PTC thermal protection control	00(Disabled)/ 01(PTC enabled)/ 02(NTC enabled)	00	×	○
	b099	PTC thermal protection level setting	0.~9999. Ω	3000.	×	○
Free-setting V/f pattern	b100	Free-setting V/f frequency(1)	0.~Free V/f frequency 2 Hz	0.	×	×
	b101	Free-setting V/f voltage(1)	0.~800.0 V	0.0	×	×
	b102	Free-setting V/f frequency(2)	0.~Free V/f frequency 3 Hz	0.	×	×
	b103	Free-setting V/f voltage(2)	0.~800.0 V	0.0	×	×
	b104	Free-setting V/f frequency(3)	0.~Free V/f frequency 4 Hz	0.	×	×
	b105	Free-setting V/f voltage(3)	0.~800.0 V	0.0	×	×
	b106	Free-setting V/f frequency(4)	0.~Free V/f frequency 5 Hz	0.	×	×
	b107	Free-setting V/f voltage(4)	0.~800.0 V	0.0	×	×
	b108	Free-setting V/f frequency(5)	0.~Free V/f frequency 6 Hz	0.	×	×
	b109	Free-setting V/f voltage(5)	0.~800.0 V	0.0	×	×
	b110	Free-setting V/f frequency(6)	0.~Free V/f frequency 7 Hz	0.	×	×
	b111	Free-setting V/f voltage(6)	0.~800.0 V	0.0	×	×
	b112	Free-setting V/f frequency(7)	0.~400. Hz	0.	×	×
	b113	Free-setting V/f voltage(7)	0.~800.0 V	0.0	×	×
Others	b120	Brake control enable	00(Disabled)/ 01(Enabled)	00	×	○
	b121	Wait time for brake release establishment	0.00~5.00sec	0.00	×	○
	b122	Wait time for acceleration	0.00~5.00sec	0.00	×	○
	b123	Wait time for stopping	0.00~5.00sec	0.00	×	○
	b124	Wait time for brake verification	0.00~5.00sec	0.00	×	○
	b125	Release frequency setting	0.00~99.99/ 100.0~400.0 Hz	0.00	×	○
	b126	Release current setting	0.00 x rated current to 2.00 x rated current	Rated current	×	○

※ 1) < > 75~132kW

■ Expanded Function C

○ = Allowed
× = Not permitted

	Code	Name	Description	Default setting	Run-time setting	Run-time data edit
Intelligent input terminal setting	C001	Terminal(1) function	01(RV:Reverse)/ 02(CF1: Multispeed(1))/ 03(CF1: Multispeed(2))/ 04(CF3:Multispeed(3))/ 05(CF4: Multispeed(4))/ 06(JG: Jogging)/ 07(DB: External DC braking)/ 08(SET: Second constants setting)/ 09(2CH: Second accel./decel.)/ 11(FRS: Free run stop)/ 12(EXT: External trip)/ 13(USP: Unattended start protection)/ 14(CS: Change to/from commercial power supply)/ 15(SFT: Software lock)/ 16(AT: Analog input selection)/ 17(SET3: Third constants setting)/ 18(RS: Reset)/ 20(STA: 3-wire start)/ 21(STP: 3-wire hold)/ 22(F/R: 3-wire fwd./rev.)/ 23(PID: PID On/Off)/ 24(PIDC: PID reset)/ 26(CAS: Control gain setting)/ 27(UP: Remote-controlled accel.)/ 28(DWN: Remote-controlled decel.)/ 29(UDC: Remote-controlled data clearing)/ 31(OPE: Operator control)/ 32(SF1: Multispeed bit command(1)/ 33(SF2: Multispeed bit command(2)/ 34(SF3: Multispeed bit command(3)/ 35(SF4: Multispeed bit command(4)/ 36(SF5: Multispeed bit command(5)/ 37(SF6: Multispeed bit command(6)/ 38(SF7: Multispeed bit command(7)/ 39(OLR: Overload limit change)/ 40(TL: Torque limit enable)/ 41(TRQ1: Torque limit selection(1))/ 42(TRQ2: Torque limit selection(2))/ 43(PPI: P/PI selection)/ 44(BOK: Brake verification)/ 45(ORT: Orientation)/ 46(LAC: LAD cancel)/ 47(PCLR: Positioning deviation reset)/ 48(STAT: 90-degree phase difference permission) / no(NO: Not selected)	18(RS)	×	○
	C002	Terminal(2) function		16(AT)	×	○
	C003	Terminal(3) function		06(JG)	×	○
	C004	Terminal(4) function		11(FRS)	×	○
	C005	Terminal(5) function		09(2CH)	×	○
	C006	Terminal(6) function		03(CF2)	×	○
	C007	Terminal(7) function		02(CF1)	×	○
	C008	Terminal(8) function		01(RV)	×	○
Intelligent input terminal state setting	C011	Terminal(1) active state	00(NO)/ 01(NC)	00	×	○
	C012	Terminal(2) active state	00(NO)/ 01(NC)	00	×	○
	C013	Terminal(3) active state	00(NO)/ 01(NC)	00	×	○
	C014	Terminal(4) active state	00(NO)/ 01(NC)	00	×	○
	C015	Terminal(5) active state	00(NO)/ 01(NC)	00	×	○
	C016	Terminal(6) active state	00(NO)/ 01(NC)	00	×	○
	C017	Terminal(7) active state	00(NO)/ 01(NC)	00	×	○
	C018	Terminal(8) active state	00(NO)/ 01(NC)	00	×	○
	C019	Terminal FW active state	00(NO)/ 01(NC)	00	×	○
Intelligent output terminal setting	C021	Terminal(11) function	00(RUN: Run signal)/ 01(FA1: Frequency arrival signal(at the set frequency))/ 02(FA2: Frequency arrival signal (at or above the set frequency))/ 03(OL: Overload advance notice signal)/ 04(OD: Output deviation for PID control)/ 05(AL: Alarm signal)/ 06(FA3: Frequency arrival signal(only at the set frequency))/ 07(OTQ: Over torque)/ 08(IP: Instantaneous power failure signal)/ 09(UV: Under-voltage signal)/ 10(TRQ: In torque limit)/ 11(RNT: Operation time over)/ 12(ONT: Power-on time over)/ 13(THM: Thermal alarm)/ 19(BRK: Brake release)/ 20(BER: Brake error)/ 21(ZS: Zero speed)/ 22(DSE: Speed deviation maximum)/ 23(POK: Positioning completion)/ 24(FA4: Frequency arrival signal (at or above the set frequency)(2))/ 25(FA5: Frequency arrival signal(only at the set frequency)(2))/ 26(OL2: Overload advance notice signal(2)) (Terminal 11~13 or 11~14 are automatically configured as AC0~AC2 or AC0~AC3 when alarm code output is selected at C62)	01(FA1)	×	○
	C022	Terminal(12) function		00(RUN)	×	○
	C023	Terminal(13) function		03(OL)	×	○
	C024	Terminal(14) function		07(OTQ)	×	○
	C025	Terminal(15) function		08(IP)	×	○
	C026	Alarm relay terminal function		05(AL)	×	○
	C027	FM signal selection	00(Output frequency)/ 01(Output current)/ 02(Output torque)/ 03(Digital output frequency-only at C027)/ 04(Output voltage)/ 05(Power)/ 06(Thermal load ratio/ 07(LAD frequency)	00	×	○
	C028	AM signal selection		00	×	○
	C029	AMI signal selection		00	×	○
Output terminal state setting/ output level setting	C031	Terminal(11) active state	00(NO)/ 01(NC)	00	×	○
	C032	Terminal(12) active state	00(NO)/ 01(NC)	00	×	○
	C033	Terminal(13) active state	00(NO)/ 01(NC)	00	×	○
	C034	Terminal(14) active state	00(NO)/ 01(NC)	00	×	○
	C035	Terminal(15) active state	00(NO)/ 01(NC)	00	×	○
	C036	Alarm relay terminal active state	00(NO)/ 01(NC)	01	×	○
	C040	Overload signal output mode	00(During accel./decel.)/ 01(At constant speed)	01	×	○
	C041	Overload level setting	0.00*rated current~2.00*rated current	Rated current	×	○
	C042	Arrival frequency setting for acceleration	0.00~99.99/ 100.0~400.0 Hz	0.00	×	○
	C043	Arrival frequency setting for deceleration	0.00~99.99/ 100.0~400.0 Hz	0.00	×	○
	C044	PID deviation level setting	0.0~100.0%	3.0	×	○

■ Expanded Function C

○ = Allowed
× = Not permitted

	Code	Name	Description	Default setting	Run-time setting	Run-time data edit
Output terminal state setting/ output level setting	C045	Arrival frequency setting for acceleration(2)	0.00~99.99/ 100.0~400.0 Hz	0.00	×	○
	C046	Arrival frequency setting for deceleration(2)	0.00~99.99/ 100.0~400.0 Hz	0.00	×	○
	C055	Over-torque(Forward-forcing) level setting	0.~200.%	100.	×	○
	C56	Over-torque(Reverse-regenerating) level setting	0.~200.%	100.	×	○
	C57	Over-torque(Reverse-forcing) level setting	0.~200.%	100.	×	○
	C58	Over-torque(Forward-regenerating) level setting	0.~200.%	100.	×	○
	C061	Electronic thermal warning level	0.~100.%	80	×	○
	C062	Alarm code input	00(Disabled)/ 01(3 bit)/ 02(4 bit)	00	×	○
	C063	Zero speed detection level	0.00~99.99/100.0 Hz	0.00	×	○
Communication function	C070	Data commanding method	02(Operator)/ 03(RS485)/ 04(Option 1)/ 05(Option 2)	02	×	×
	C071	Communication speed selection	02(TEST)/ 03(2400bps)/ 04(4800bps)/ 05(9600bps)/ 06(19200bps)	04	×	○
	C072	Address allocation	1.~32.	1.	×	○
	C073	Communication bit length selection	7(7 bit)/ 8(8 bit)	7	×	○
	C074	Communication parity selection	00(No parity)/ 01(Even)/ 02(Odd)	00	×	○
	C075	Communication stop bit selection	1(1 bit)/ 2(2 bit)	1	×	○
	C078	Communication wait time	0.~1000.ms	0.	×	○
Analog meter setting	C081	Fine tuning for O terminal input	0.~9999./ 1000~6553	Factory set	○	○
	C082	Fine tuning for OI terminal input	0.~9999./ 1000~6553	Factory set	○	○
	C083	Fine tuning for O2 terminal input	0.~9999./ 1000~6553	Factory set	○	○
	C085	Thermistor tuning	0.0~1000.	105.0	○	○
	C086	AM offset tuning	0.0~10.0 V	0.0	○	○
	C087	AMI meter tuning	0.0~255.	80	○	○
	C088	AMI offset tuning	0.~20.0mA	0.0	○	○
Others	C091	Debug mode enable	00(No Display)/ 01(Display)	00	×	○
	C101	UP/DOWN mode selection	00(Clear previous frequency)/ 01(Keep previous frequency)	00	×	○
	C102	Reset mode selection	00(Cancel trip state when reset signal turns ON)/ 01(Cancel trip state when reset signal turns OFF)/ 02(Cancel trip state when reset signal turns ON(Enabled during trip state))	00	×	○
	C103	Restart frequency after reset	00(Restart at 0 Hz)/ 01(Resume operation after frequency matching)	00	×	○
	C111	Overload level setting(2)	0.00*rated current~2.00*rated current	Rated current	×	○
	C121	Zero tuning at O terminal	0~9999/ 1000~6553	Factory set	○	○
	C122	Zero tuning at OI terminal	0~9999/ 1000~6553	Factory set	○	○
	C123	Zero tuning at O2 terminal	0~9999/ 1000~6553	Factory set	○	○

■ Expanded Function H

○ = Allowed
× = Not permitted

	Code	Name	Description	Default setting	Run-time setting	Run-time data edit
Motor constant	H001	Auto-tuning selection	00(NOR: Disabled)/ 01(NOR: No rotation)/ 02(AUT: Rotation)	00	×	×
	H002	First motor constants selection	00(Hyundai standard motor)/ 01(Auto-data)/ 02(Auto-data(withon-line auto-tuning)	00	×	×
	H202	Second motor constants selection	00(Hyundai standard motor)/ 01(Auto-data)/ 02(Auto-data(with on-line auto-tuning)	00	×	×
	H003	First motor capacity selection	0.20~75.0(kW) < 0.2~160kW >[1)]	Factory Set	×	×
	H203	Second motor capacity selection	0.20~75.0(kW) < 0.2~160kW >[1)]	Factory Set	×	×
	H004	First motor poles selection	2/4/6/8	4	×	×
	H204	Second motor poles selection	2/4/6/8	4	×	×
	H005	Speed response setting for first motor	0.001~9.999/ 10.00~65.53	1.590	○	○
	H205	Speed response setting for second motor	0.001~9.999/ 10.00~65.53	1.590	○	○
	H006	Stabilization constant setting for first motor	0.~255.	100.	○	○
	H206	Stabilization constant setting for second motor	0.~255.	100.	○	○
	H306	Stabilization constant setting for third motor	0.~255.	100.	○	○
	H020	R1 setting for first motor	0.000~9.999/ 10.00~65.53(Ω)	According to capacity	×	×
	H220	R1 setting for second motor	0.000~9.999/ 10.00~65.53(Ω)	According to capacity	×	×
	H021	R2 setting for first motor	0.000~9.999/ 10.00~65.53(Ω)	According to capacity	×	×
	H221	R2 setting for second motor	0.000~9.999/ 10.00~65.53(Ω)	According to capacity	×	×
	H022	L setting for first motor	0.00~9.99/ 100.0~655.3(mH)	According to capacity	×	×
	H222	L setting for second motor	0.00~9.99/ 100.0~655.3(mH)	According to capacity	×	×
	H023	Io setting for first motor	0.00~9.99/ 100.0~655.3(A)	According to capacity	×	×
	H223	Io setting for second motor	0.00~9.99/ 100.0~655.3(A)	According to capacity	×	×
	H024	J setting for first motor	0.001~9.999/ 10.00~99.99/ 100.0~9999.(kg㎡)	According to capacity	×	×
	H224	J setting for second motor	0.001~9.999/ 10.00~99.99/ 100.0~9999.(kg㎡)	According to capacity	×	×
	H030	Auto R1 setting for first motor	0.000~9.999/ 10.00~65.53(Ω)	According to capacity	×	×
	H230	Auto R1 setting for second motor	0.000~9.999/ 10.00~65.53(Ω)	According to capacity	×	×
	H031	Auto R2 setting for first motor	0.000~9.999/ 10.00~65.53(Ω)	According to capacity	×	×
	H231	Auto R2 setting for second motor	0.000~9.999/ 10.00~65.53(Ω)	According to capacity	×	×
	H032	Auto L setting for first motor	0.00~99.99/ 100.0~655.3(mH)	According to capacity	×	×
	H232	Auto L setting for second motor	0.00~99.99/ 100.0~655.3(mH)	According to capacity	×	×
	H033	Auto Io setting for first motor	0.00~99.99/ 100.0~655.3(A)	According to capacity	×	×
	H233	Auto Io setting for second motor	0.00~99.99/ 100.0~655.3(A)	According to capacity	×	×
	H034	Auto J setting for first motor	0.001~9.999/ 10.00~99.99/ 100.0~9999.(kg㎡)	According to capacity	×	×
	H234	Auto J setting for second motor	0.001~9.999/ 10.00~99.99/ 100.0~9999.(kg㎡)	According to capacity	×	×
	H050	PI proportional gain setting for first motor	0.00~99.99/ 100.0~999.9/ 1000(%)	100.0	○	○
	H250	PI proportional gain setting for second motor	0.00~99.99/ 100.0~999.9/ 1000(%)	100.0	○	○
	H051	PI integral gain setting for first motor	0.00~99.99/ 100.0~999.9/ 1000(%)	100.0	○	○
	H251	PI integral gain setting for second motor	0.00~99.99/ 100.0~999.9/ 1000(%)	100.0	○	○
	H052	P proportional gain setting for first motor	0.01~10.00	1.00	○	○
	H252	P proportional gain setting for second motor	0.01~10.00	1.00	○	○
	H060	Zero, LV limit setting for first motor	0.~100.	100.	○	○
	H260	Zero, LV limit setting for second motor	0.~100.	100.	○	○
	H070	Terminal selection PI proportional gain setting	0.00~99.99/ 100.0~999.9/ 1000.(%)	100.0	○	○
	H071	Terminal selection PI integral gain setting	0.00~99.99/ 100.0~999.9/ 1000.(%)	100.0	○	○
	H072	Terminal selection P proportional gain setting	0.00~10.00	1.00	○	○

※ 1) < > 75~132kW

■ Expanded Function P

○ = Allowed
× = Not permitted

Code		Name	Description	Default setting	Run-time setting	Run-time data edit
Option	P001	Operation mode selection at Option(1) error	00(Trip)/ 01(Continuous operation)	00	×	○
	P002	Operation mode selection at Option(2) error	00(Trip)/ 01(Continuous operation)	00	×	○
	P010	Feedback option enable	00(Disabled)/ 01(Enabled)	00	×	×
	P011	Encoder pulse setting	128. ~9999./ 1000~6500(10000~65000) pulses	1024.	×	×
	P012	Control mode selection	00(ASR mode)/ 01(APR mode)	00	×	×
	P013	Pulse-line mode setting	00/ 01/ 02/ 03	00	×	×
	P014	Orientation stop position setting	0.~4095.	0.	×	○
	P015	Orientation speed setting	0.00~99.99/ 100.0~120.0 Hz	5.00	×	○
	P016	Orientation direction setting	00(Forward)/ 01(Reverse)	00	×	×
	P017	Orientation completion range setting	0.~9999./ 1000 pulses	5	×	○
	P018	Orientation completion delay time setting	0.00~9.99 sec	0.00	×	○
	P019	Electronic gear set position selection	00(Positioning feedback side)/ 01(Positioning command side)	00	×	○
	P020	Electronic gear ratio numerator setting	0.~9999.	1.	×	○
	P021	Electronic gear ratio denominator setting	0.~9999.	1.	×	○
	P022	Feed-forward gain setting	0.00~99.99/ 100.0~655.3	0.00	×	○
	P023	Position loop gain setting	0.00~99.99/ 100.0	0.50	×	○
	P025	Secondary resistor error correction enable	00(Disabled)/ 01(Enabled)	00	×	○
	P026	Over-speed error detection level setting	0.00~99.99/ 100.0~150.0%	135.0	×	○
	P027	Speed deviation error detection level setting	0.00~99.99/ 100.0~120.0 Hz	7.50	×	○
	P031	Accel./decel. time input selection	00(Operator)/ 01(Option(1))/ 02(Option(2))	00	×	×
	P032	Positioning command input selection	00(Operator)/ 01(Option(1))/ 02(Option(2))	00	×	○
	P044	DeviceNet running order of monitoring time setting	0.00~99.99 sec	1.00	×	×
	P045	Setting in action of abnormal communication	00(Trip)/ 01(Controlled stop trip)/ 02(Ignore)/ 03(Coast to stop)/ 04(Controlled stop)	01	×	×
	P046	Out assemble instance number setting	20, 21, 100	21	×	×
	P047	Input assemble instance number setting	70, 71, 101	71	×	×
	P048	Detection of idle mode for motion setting	00(Trip)/ 01(Controlled stop trip)/ 02(Ignore)/ 03(Coast to stop)/ 04(Controlled stop)	01	×	×
	P049	Pole setting of rotation speed	0~38(Setting only an even number	0	×	×

■ Expanded Function U

Code		Name	Description	Default setting	Run-time setting	Run-time data edit
	U001~U012	User`s selection of 12 functions	no/ d001~P049 < ~P032 >[1]	no	×	○

※ 1) < > 75~132kW

HYUNDAI INVERTER

Terminals

Main Circuit Terminals

■ Terminal Description

Terminal Symb	Terminal name
R(L1), S(L2), T(L3)	Main power supply input terminals
U(T1), V(T2), W(T3)	Inverter output terminals
PD(+1), P(+)	DC reactor connection terminals
P(+), RB(RB)	External braking resistor connection terminals
P(+), N(-)	External braking unit connection terminals
⏚ (G)	Ground connection terminal
Ro(Ro), To(To)	Control power supply input terminals

■ Terminal Arrangement

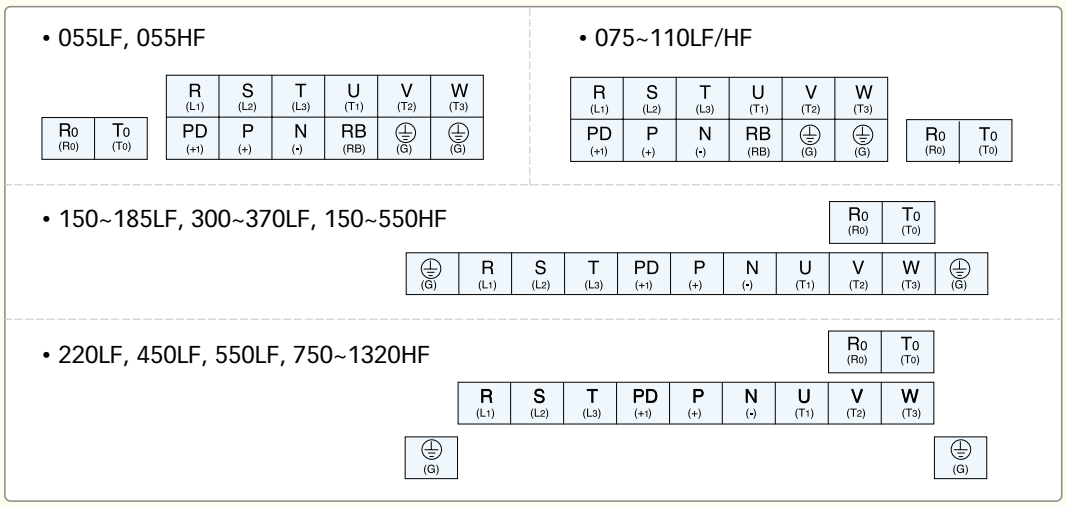

■ Screw Diameter and Terminal Width

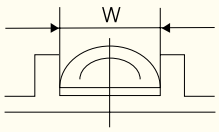

W: Terminal width

Model	Screw diameter	Terminal width(mm)
055LF/ HF	M5	13
075LF/ HF	M5	17.5
110LF/ HF	M6	17.5
150LF, 185LF/ 150~370HF	M6	18
220~370LF/ 550HF	M8	23
450LF	M10	35
550LF, 1100HF~1320HF	M10	40
RoTo Terminal(All models)	M4	9
750HF~900HF	M10	29

Control Circuit Terminals

■ Control Terminal Arrangement

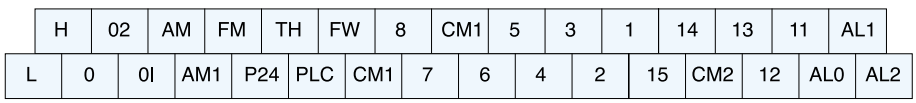

■ Terminal Description

			Symbol	Name	Explanation of Terminals	Ratings
Analog	Power supply		L	Common terminal for analog power source	Common terminal for H, O, O2, OI, AM, and AMI. Do not ground	-
Analog	Frequ-ency setting		H	Power source for frequency	Power supply for frequency command input	DC 10 V, 20 mA max.
Analog	Frequ-ency setting		O	Frequency command terminal	Maximum frequency is attained at DC 10 V in DC 0~10 V range. Set the voltage at A014 to command maximum frequency below DC 10 V.	Input impedance: 10 kΩ , Allowable input voltage range: DC -0.3~+12 V
Analog	Frequ-ency setting		O2	Frequency command extra terminal	O2 signal is added to the frequency command of O or OI in DC 0~±10 V range. By changing configuration, frequency command can be inputted also at O2 terminal.	Input impedance:10 kΩ , Allowable input voltage range: DC 0~±12 V
Analog	Frequ-ency setting		OI	Frequency command terminal	Maximum frequency is attained at DC 20 mA in DC 4~20 mA range. When the intelligent terminal configured as AT is on, OI signal is enabled.	Input impedance: 100 kΩ , Allowable input voltage range: DC 0~24 mA
Analog	Monitor output		AM	Analog output monitor(voltage)	Selection of one function from: output frequency, output current, torque, output voltage, input power, electronic thermal load ratio.	DC 0~10 V, 2 mA max.
Analog	Monitor output		AMI	Analog output monitor(current)		DC 4~20 mA, 250 Ω max.
Analog	Monitor output		FM	Digital monitor (Voltage)	[DC0~10 V output (PWM output)] selection of one function from: output frequency, output current, torque, output voltage, input power, electronic thermal load ratio. [Digital pulse output (Pulse voltage DC 0/10 V)] Outputs the value of output frequency as digital pulse (duty 50%)	Digital output frequency range: 0~3.6 kHz, 1.2 mA max.
Digital	Power supply		P24	Power terminal for interface	Internal power supply for input terminals. In case of source type logic, common terminal for contact input terminals.	DC 24 V, 100 mA max.
Digital	Power supply		CM1	Common terminal for interface	Common terminal for P24, TH, and FM. In case of sink type logic, common terminal for contact input terminals. Do not ground.	-
Digital	Contact input	Run com-mand	FW	Forward command input	Forward command input	[Input ON condition] Voltage between each terminal and PLC: DC 18 V min. [Input OFF condition] -Voltage between each terminal and PLC: DC 3 V max. -Input impedance between each terminal and PLC: 4.7 Ω -Allowable maximum voltage between each terminal and PLC: DC 27 V
Digital	Contact input	Function	1 2 3 4 5 6 7 8	Intelligent input terminals	Selection of 8 functions from: RV(Reverse), CF1-CF4(Multispeed command), JG(Jogging), DB(External DC braking), SET(Second motor constants setting), 2CH(Second accel./decel.), FRS(Free-run stop), EXT(External trip), USP(Unattended start protection), CS(Change to/from commercial power supply), SFT(Software lock), AT(Analog input selection), RS(Reset), STA(3-wire start), STP(3-wire stop), F/R(3-wire fwd./rev.), PID(PID On/Off), PIDC(PID reset), UP/DWN(Remote controlled accel. /decel.), UDC(Remote-controlled data clearing),SF1-SF7(Multispeed bit command 1~7), OLR(Overload limit change), and NO(Not selected)	
Digital	Contact input	Common terminal	PLC	Common terminal for intelligent input terminals	Select sink or source logic with the short-circuit bar on the control terminals. Sink logic: Short P24 to PLC / Source logic: Short CM1 to PLC. When applying external power source, remove the short-circuit bar and connect PLC terminal to the external device.	
Digital	Open collector output	State	11 12 13 14 15	Intelligent output terminals	Select 5 functions of inverter state, and configure them at terminal11~15. When the alarm code is selected at C062, terminal 11~13 or 11~14 are reserved for error codes of inverter trip. Both sink and source logic are always applicable between each terminal and CM1.	-Decrease in voltage between each terminal and CM2: 4 V max. during ON -Allowable maximum voltage: DC 27 V Allowable maximum current: 50 mA
Digital	Open collector output		CM2	Common terminal for intelligent output terminals	Common terminal for intelligent output terminal 11~15.	
Analog	Analog input	Sensor	TH	Thermistor input terminals	The inverter trips when the external thermistor detects abnormal temperature. Common terminal is CM1.[Recommended thermistor characteristics] Allowable rated power: 100mW or over. Impedance in case of abnormal temperature: 3 kΩ Note: Thermal protection level can be set between 0 and 9999 Ω	Allowable input voltage range 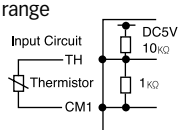
Digital	Realy output	State/Alarm	AL0 AL1 AL2	Alarm output terminals	In default setting, an alarm is activated when inverter output is turned off by a protective function.	Maximum capacity of relays AL1-AL0: AC 250 V, 2A(R load)/ 0.2A(I load)/ AL2-AL0:AC 250V, 1A(R load)/ 0.2A(I load) Minimum capacity of relays/ AL1-AL0: AC100 V,10mA DC5 V,100 mA

Protective Functions

■ Error Code

Name	Cause(s)		Display on digital operator	Display on remote operator(copy unit) ERR1 ****
Over-current protection	The inverter output was short-circuited, or the motor shaft is locked or has a heavy load. These conditions cause excessive current for the inverter, so the inverter output is turned off.	While at constant speed	E01	OC.Drive
		During deceleration	E02	OC.Decel
		During acceleration	E03	OC.Accel
		Others	E04	Over.C
Overload protection (*1)	When a motor overload is detected by the electronic thermal function, the inverter trips and turns off its output.		E05	Over.L
Braking resistor overload protection	When the regenerative braking resistor exceeds the usage time allowance or an over voltage caused by the stop of the BRD function is detected, the inverter trips and turns off its output.		E06	OL.BRD
Over-voltage protection	When the DC bus voltage exceeds a threshold, due to regenerative energy from the motor, the inverter trips and turns off its output.		E07	Over.V
EEPROM error (*2)	When the built-in EEPROM memory has problems due to noise or excessive temperature, the inverter trips and turns off its output.		E08	EEPROM
Under-voltage error	A decrease of internal DC bus voltage below a threshold results in a control circuit fault. This condition can also generate excessive motor heat or cause low torque. The inverter trips and turns off its output.		E09	Under.V
CT error	If a strong source of electrical interference is close to the inverter or abnormal operations occur in the built-in CT, the inverter trips and turns off its output.		E10	CT
CPU error	When a malfunction in the built-in CPU has occurred, the inverter trips and turns off its output.		E11	CPU1
External trip	When the external equipment or unit has an error, the inverter receives the corresponding signal and cut off the output.		E12	EXTERNAL
USP error	An error occurs when power is cycled while the inverter is in RUN mode if the Unattended Start Protection (USP) is enabled. The inverter trips and does not go into RUN mode until the error is cleared.		E13	USP
Ground fault	The inverter is protected by the detection of ground faults between the inverter output and the motor during power-up tests. This feature protects the inverter only.		E14	GND.Flt
Input over-voltage protection	When the input voltage is higher than the specified value, it is detected 60 seconds after power-up and the inverter trips and turns off its output.		E15	OV.SRC
Instantaneous power failure	When power is cut for more than 15ms, the inverter trips and turns off its output. If power failure continues, the error will be cleared. The inverter restarts if it is in RUN mode when power is cycled.		E16	Inst.P-F
Inverter thermal trip	When the inverter internal temperature is higher than the specified value, the thermal sensor in the inverter module detects the higher temperature of the power devices and trips, turning off the inverter output.		E21	OH.FIN
Gate array error	Communication error has occurred in CPU and gate array.		E23	GA
Phase failure detection	One of three lines of 3-phase power supply is missing.		E24	PH.Fail
IGBT error	When an instantaneous over-current has occurred, the inverter trips and turns off its output to protect main circuit element.		E30	IGBT
Thermistor error	When the thermistor inside the motor detects temperature higher than the specified value, the inverter trips and turns off its output.		E35	TH
Braking error	The inverter turns off its output when it can not detect whether the braking is ON or OFF within waiting time set at b024 after it has released the brake. (When braking is enabled at b120)		E36	BRAKE
Out of operation due to under voltage	Due to insufficient voltage, the inverter has turned off its output and been trying to restart. If it fails to restart, it goes into the under-voltage error.		---	UV.WAIT
Option 1 connection error	An error has been detected in an option or at connecting terminals for it.		E60~E69	OP1-0~OP1-9
Option 2 connection error			E70~E79	OP2-0~OP2-9
Communication error	An error between operator and inverter has been detected.		---	R-ERROR COMM <2>

※ *1) After a trip occurs and 10 second pass, restart with reset operation. *2) When EEPROM error E08 occurs, confirm the setting data again.

<Status display>

Code	Description
0	Reset
1	Stop
2	Deceleration
3	Constant Speed
4	Acceleration

Code	Description
5	F0 Stop
6	Starting
7	DB
8	Overload Restriction

< How to access the details about the present fault >

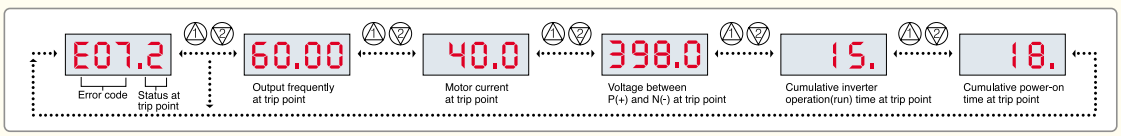

200 Volt Example:

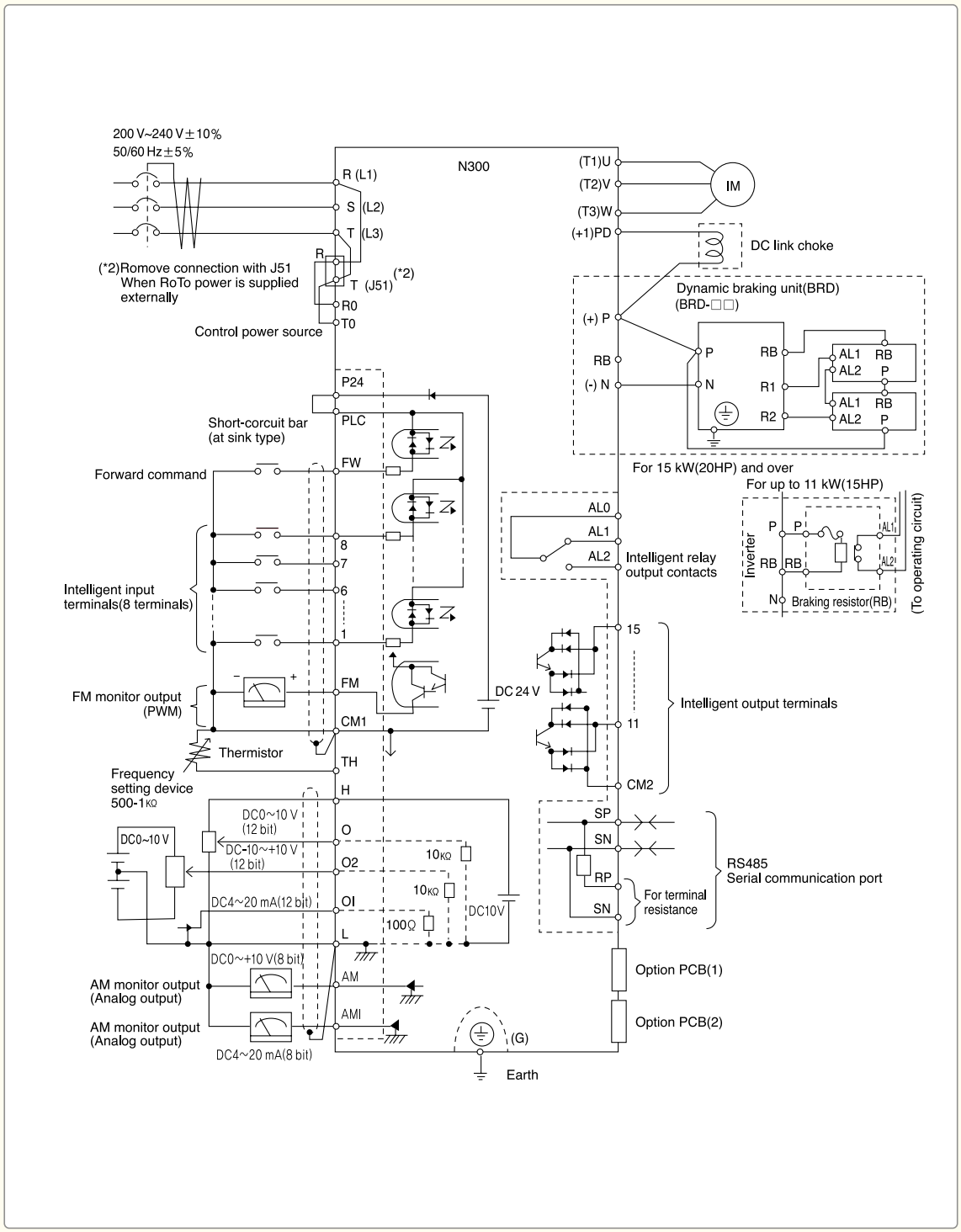

Terminal Name	FW, 1, 2, 3, 4, 5, 6, 7, 8, FM, TH	H, O, 02, OI, AM, AMI	11, 12, 13, 14, 15
Common terminal	CM1	L	CM2

Note) Common of each terminal is different.

Connecting to PLC

■ Connection with Input Terminals

1. Using internal power source of the Inverter

(1) Sink type logic	(2) Source type logic

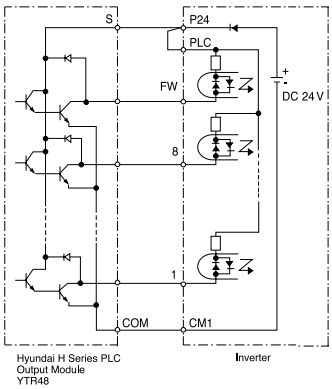

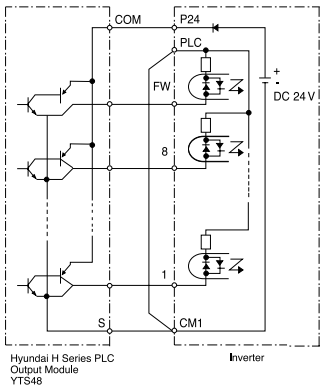

(Note: Place short-circuit bar between PLC and CM1 instead of P24 and PLC)

2. Using external power source

(1) Sink type logic	(2) Source type logic

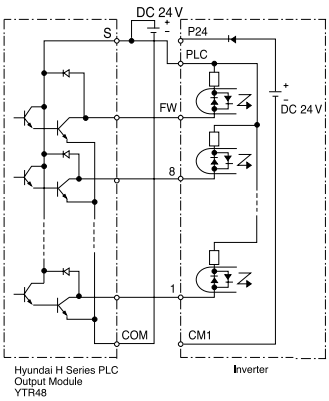

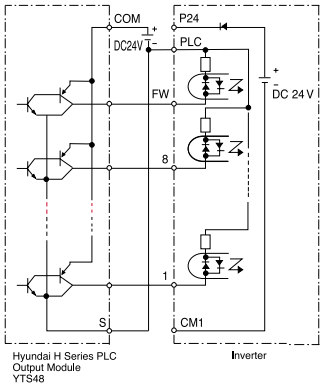

(Note: Remove short-circuit bar between P24 and PLC)

Note) Be sure to turn on the inverter after turning on the PLC and its external power source to prevent the parameters in the inverter from being modified.

■ Connection with Output Terminals

(1)Sink type logic	(2) Source type logic

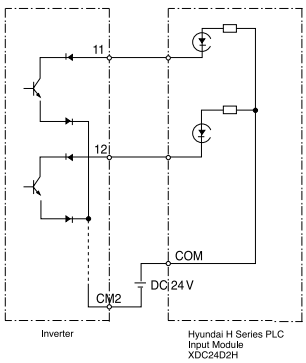

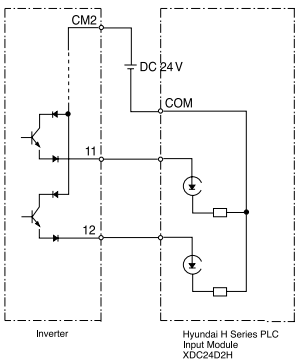

■ Wiring and Options

Motor output(kW)		Model	Wiring			MCCB	MC
			R,S,T,U,V, W,P,N,PD	P,RB	Signal lines		
200 V	5.5	N300-055LF	5.5㎟	5.5㎟	0.75㎟ Shielded wire	HiBS 60	HiMC 32
	7.5	N300-075LF	8㎟	5.5㎟		HiBS 60	HiMC 32
	11	N300-110LF	14㎟	5.5㎟		HiBS 100	HiMC 50
	15	N300-150LF	22㎟	-		HiBS 100	HiMC 65
	18.5	N300-185LF	30㎟	-		HiBS 225	HiMC 80
	22	N300-220LF	38㎟	-		HiBS 225	HiMC 110
	30	N300-300LF	60㎟(22㎟×2)	-		HiBS 225	HiMC 130
	37	N300-370LF	100㎟(38㎟×2)	-		HiBS 225	HiMC 150
	45	N300-450LF	100㎟(38㎟×2)	-		HiBS 400	HiMC 220
	55	N300-550LF	150㎟(60㎟×2)	-		HiBS 400	HiMC 220
400 V	5.5	N300-055HF	2㎟	2㎟		HiBS 30	HiMC 18
	7.5	N300-075HF	3.5㎟	3.5㎟		HiBS 30	HiMC 22
	11	N300-110HF	5.5㎟	5.5㎟		HiBS 60	HiMC 32
	15	N300-150HF	8㎟	-		HiBS 100	HiMC 40
	18.5	N300-185HF	14㎟	-		HiBS 100	HiMC 40
	22	N300-220HF	14㎟	-		HiBS 100	HiMC 50
	30	N300-300HF	22㎟	-		HiBS 100	HiMC 65
	37	N300-370HF	38㎟	-		HiBS 225	HiMC 80
	45	N300-450HF	38㎟	-		HiBS 225	HiMC 110
	55	N300-550HF	60㎟	-		HiBS 225	HiMC 130
	75	N300-750HF	100㎟(38×2)	-		HiBS 400	HiMC 180
	90	N300-900HF	100㎟(38×2)	-		HiBS 400	HiMC 220
	110	N300-1100HF	150㎟(60×2)	-		HiBS 400	HiMC 260
	132	N300-1320HF	80㎟×2	-		HiBS 400	HiMC 300

NOTE 1) Field wiring connection must be made by a UL listed and C-UL certified closed-loop terminal connector sized for the wire guage involved. Connector must be fixed using the crimp tool specified by the connector manufacturer.

NOTE 2) Be sure to use bigger wires for power lines if the distance exceeds 20m.

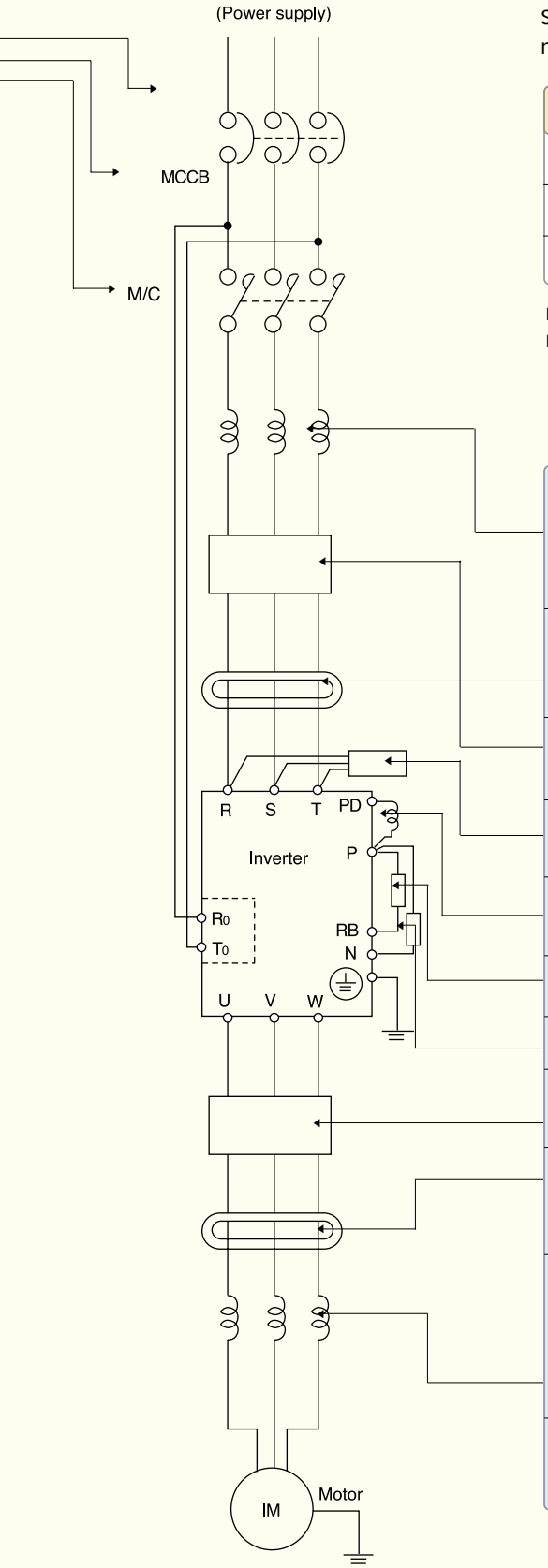

Separate by the sum(wiring distance from Inverter to power supply, from inverter to motor for the sensitive current of leak breaker (ELB).

Wiring distance	Sensitive Current(mA)
100m and less	30
300m and less	100
600m and less	200

Note 1) When using CV line and wiring by rigid metal conduit, leak flows.
Note 2) IV line is high dielectric constant. So the current increase 8 times.
Therefore, use the sensitive current 8 times as large as that of the left list.
And if the distance of wire is over 100m, use CV line.

Input-side AC reactor	This is useful in suppressing harmonics induced on the power supply lines, or when the main power voltage imbalance exceeds 3%(and power source capacity is more than 500kVA), or to smooth out line fluctuations. It also improves the power factor.
EMI filter	Reduces the conducted noise on the power supply wiring generated by the inverter. Connect to the inverter input side.
Radio noise filter	Electrical noise interference may occur on nearby equipment such as a radio receiver. This magnetic choke filter helps reduce radiated noise (can also be used on output).
Radio noise filter (Capacitive filter)	This capacitive filter reduces radiated noise from the main power wires in the inverter input side.
DC link choke	Suppresses harmonics generated by the inverter
Braking resistor Braking unit	This is useful for increasing the inverter' s control torque for high duty-cycle (on-off) applications, and improving the decelerating capability
Output side noise filter	Reduces radiated noise from wiring in the inverter output side
Radio noise filter	Electrical noise interference may occur on nearby equipment such as a radio receiver. This magnetic choke filter helps reduce radiated noise (can also be used on input)
AC reactor	This reactor reduces the vibration in the motor caused by the inverter' s switching waveforms, by smoothing the waveforms to approximate commercial power quality. It is also useful when wiring from the inverter to the motor is more than 10m in length, to reduce harmonics
LCR filter	Sine wave shaping filter for the output side.

■ Input · Output AC Reactor

● Dimension

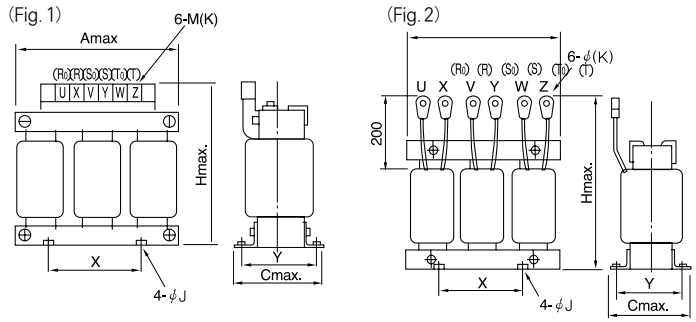

● Connecting Diagram

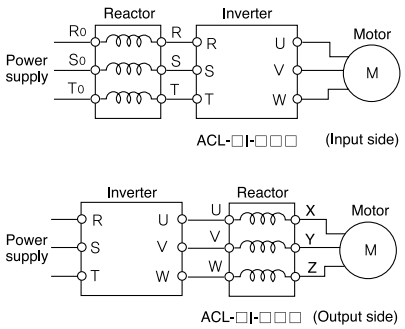

Input-side AC Reactor

Power harmonics AC Reactor for power factor improvement

ACL-L I-2.5

L: 3-phase 200 V
H: 3-phase 400 V
Input
Inverter output capacity(kVA)

Voltage	Model	Dimension(mm)						ⓚ	Weight (kg)	See
		A	C	H	X	T	J			
220 V class	ACL-LI-1.5	110	80	110	40	52	6	4	1.85	Fig.1
	ACL-LI-2.5	130	90	130	50	67	6	4	3.0	Fig.1
	ACL-LI-3.5	130	95	130	50	70	6	4	3.4	Fig.1
	ACL-LI-5.5	130	100	130	50	72	6	4	3.9	Fig.1
	ACL-LI-7.5	130	115	130	50	90	6	4	5.2	Fig.1
	ACL-LI-11	180	120	190	60	80	6	5	8.6	Fig.1
	ACL-LI-15	180	120	190	100	80	6	6.7	10.0	Fig.2
	ACL-LI-22	220	130	200	90	90	6	8	11.0	Fig.1
	ACL-LI-33	220	130	200	125	90	6	8	15.0	Fig.1
	ACL-LI-40	270	130	250	100	90	6	8	15.0	Fig.2
	ACL-LI-50	270	130	250	100	90	7	8.3	16.0	Fig.2
	ACL-LI-60	270	135	250	100	95	7	8.3	16.5	Fig.2
	ACL-LI-70	270	130	250	125	112	7	8.3	24.0	Fig.2
440 V class	ACL-HI-5.5	130	90	130	50	75	6	4	3.9	Fig.1
	ACL-HI-7.5	130	105	130	50	90	6	4	5.1	Fig.1
	ACL-HI-11	160	110	160	60	95	6	4	8.7	Fig.1
	ACL-HI-15	180	100	190	100	80	6	4	10	Fig.2
	ACL-HI-22	180	110	190	100	80	6	5	10	Fig.1
	ACL-HI-33	180	140	190	100	100	6	5	12	Fig.1
	ACL-HI-40	270	120	210	100	100	7	6.7	14	Fig.2
	ACL-HI-50	270	120	250	100	90	7	8.3	15.5	Fig.2
	ACL-HI-60	270	125	250	100	95	7	8.3	16	Fig.2
	ACL-HI-70	270	130	250	125	112	7	8.3	23.5	Fig.2
	ACL-HI-100	270	140	250	125	112	7	10.3	26.5	Fig.2
	ACL-HI-120	320	150	300	125	125	7	10.3	31	Fig.2
	ACL-HI-150	320	160	300	125	140	7	10.3	36	Fig.2
	ACL-HI-180	320	170	300	125	140	7	13	38	Fig.2

Output-side AC Reactor

AC Reactor for increased protection for motor winding.

ACL-L-2.5

L: 3-phase 200 V
H: 3-phase 400 V
Connected motor capacity(kW)

Voltage	Model	Dimension(mm)						ⓚ	Weight (kg)	See
		A	C	H	X	T	J			
220 V class	ACL-L-0.4	110	90	110	40	65	6	4	2.7	Fig.1
	ACL-L-0.75	130	105	130	50	80	6	4	4.2	Fig.1
	ACL-L-1.5	160	100	160	80	75	6	4	6.6	Fig.1
	ACL-L-2.2	180	110	190	90	90	6	4	11.5	Fig.1
	ACL-L-3.7	220	110	210	125	90	6	4	14.8	Fig.1
	ACL-L-5.5	220	110	220	125	90	6	5.3	15.0	Fig.2
	ACL-L-7.5	220	130	220	120	112	7	6.7	22.0	Fig.2
	ACL-L-11	220	130	220	125	112	7	6.7	24.0	Fig.2
	ACL-L-15	270	155	250	140	125	7	6.7	37.0	Fig.2
	ACL-L-18.5	270	155	250	140	135	7	8.3	40.5	Fig.2
	ACL-L-22	270	170	250	140	140	7	8.3	43.0	Fig.2
	ACL-L-30	270	180	250	160	150	10	8.3	60.6	Fig.2
	ACL-L-37	270	180	250	160	150	10	8.3	62.0	Fig.2
	ACL-L-45	270	180	250	160	160	10	8.3	73.0	Fig.2
	ACL-L-55	270	190	250	160	180	10	10.3	76.0	Fig.2
440 V class	ACL-H-0.4	110	85	110	40	65	6	4	2.7	Fig.1
	ACL-H-0.75	130	100	130	50	80	6	4	4.2	Fig.1
	ACL-H-1.5	150	105	160	80	75	6	4	6.6	Fig.1
	ACL-H-2.2	180	105	190	90	90	6	4	11	Fig.1
	ACL-H-3.7	180	110	190	125	90	6	4	14.8	Fig.1
	ACL-H-5.5	180	110	190	125	90	6	4	15.5	Fig.1
	ACL-H-7.5	180	130	190	125	112	7	4	22	Fig.1
	ACL-H-11	180	130	200	125	112	7	5.3	24	Fig.2
	ACL-H-15	270	150	250	140	125	7	6.7	37	Fig.2
	ACL-H-18.5	270	165	250	140	135	7	6.7	40	Fig.2
	ACL-H-22	270	175	250	140	140	7	6.7	43	Fig.2
	ACL-H-30	270	180	250	160	150	10	8.3	60	Fig.2
	ACL-H-37	270	180	250	160	150	10	8.3	62	Fig.2
	ACL-H-45	270	190	250	160	160	10	8.3	72	Fig.2
	ACL-H-55	270	200	250	160	180	10	8.3	75	Fig.2
	ACL-H-75	270	220	250	160	190	10	8.3	93	Fig.2
	ACL-H-90	320	240	330	160	200	10	10.3	117	Fig.2
	ACL-H-110	320	280	330	160	250	10	10.3	140	Fig.2
	ACL-H-132	320	230	330	160	200	10	10.3	96	Fig.2

■ Noise Filter for Inverter

● Dimension

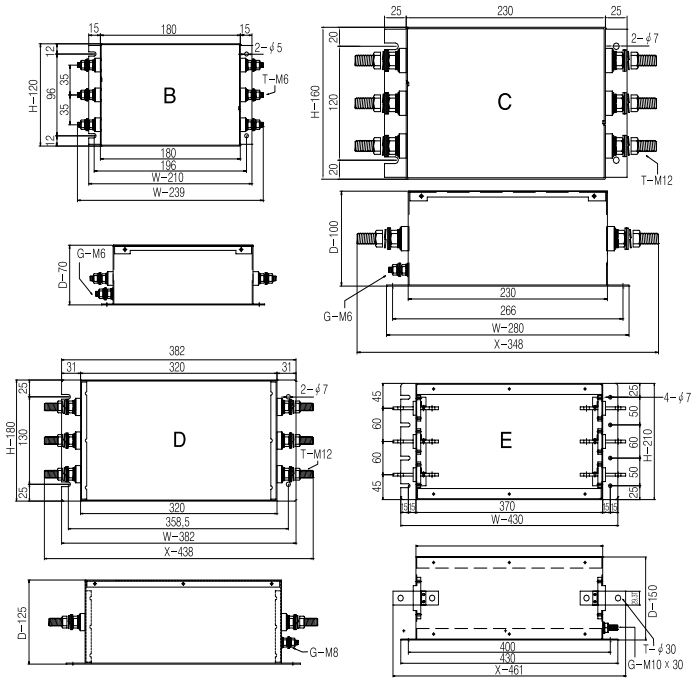

● Connecting Diagram

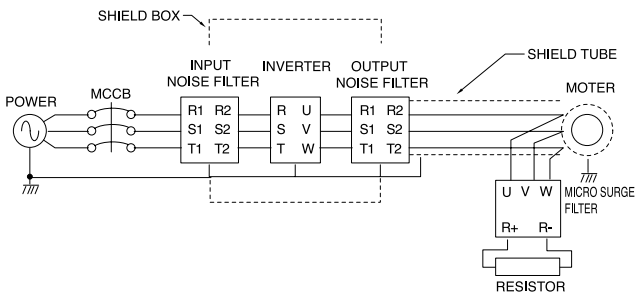

■ Input Noise Filter

Model	Inverter Rated Current	Name	Specification					Type
			V	A	Size(WxHxD) *X(mm)	G	T	
200V								
055LF	24A	FT-20301S-A	250V	30A	210x120x70*239	M6	M6	B
075LF	32A	FT-20401S-A	250V	40A	210x120x70*239	M6	M6	B
110LF	46A	FT-20501S-A	250V	50A	210x120x70*239	M6	M6	B
150LF	64A	FT-20701S-A	250V	70A	280x160x100*348	M6	M12	C
185LF	76A	FT-20801S-A	250V	80A	280x160x100*348	M6	M12	C
220LF	95A	FT-21001S-A	250V	100A	382x180x125*438	M8	M12	D
300LF	121A	FT-21301S-A	250V	130A	382x180x125*438	M8	M12	D
370LF	145A	FT-21501S-A	250V	150A	430x210x150*461	M10	M10	E
450LF	182A	FT-22001S-A	250V	200A	430x210x150*461	M10	M10	E
550LF	220A	FT-22501S-A	250V	250A	430x210x150*461	M10	M10	E
400V								
055HF	12A	FT-40201S-A	450V	20A	210x120x70*239	M6	M6	B
075HF	16A	FT-40201S-A	450V	20A	210x120x70*239	M6	M6	B
110HF	23A	FT-40301S-A	450V	30A	210x120x70*239	M6	M6	B
150HF	32A	FT-40401S-A	450V	40A	210x120x70*239	M6	M6	B
185HF	38A	FT-40401S-A	450V	40A	210x120x70*239	M6	M6	B
220HF	48A	FT-40501S-A	450V	50A	210x120x70*239	M6	M6	B
300HF	58A	FT-40601S-A	440V	60A	210x120x70*239	M6	M6	B
370HF	75A	FT-40801S-A	440V	80A	280x160x100*348	M6	M12	C
450HF	90A	FT-41001S-A	440V	100A	382x180x125*438	M8	M12	D
550HF	110A	FT-41201S-A	440V	120A	382x180x125*438	M8	M12	D
750HF	149A	FT-41501S-A	440V	150A	430x210x150*461	M10	M10	E
900HF	176A	FT-41801S-A	440V	180A	430x210x150*461	M10	M10	E
1100HF	217A	FT-42201S-A	440V	220A	430x210x150*461	M10	M10	E
1320HF	260A	FT-42601S-A	440V	260A	430x210x150*461	M10	M10	E

■ Output Noise Filter

Model	Inverter Rated Current	Name	Specification					Type
			V	A	Size(WxHxD) *X(mm)	G	T	
200V								
055LF	24A	FT-20301SO-A	250V	30A	210x120x70*239	M6	M6	B
075LF	32A	FT-20401SO-A	250V	40A	210x120x70*239	M6	M6	B
110LF	46A	FT-20501SO-A	250V	50A	210x120x70*239	M6	M6	B
150LF	64A	FT-20701SO-A	250V	70A	280x160x100*348	M6	M12	C
185LF	76A	FT-20801SO-A	250V	80A	280x160x100*348	M6	M12	C
220LF	95A	FT-21001SO-A	250V	100A	382x180x125*438	M8	M12	D
300LF	121A	FT-21301SO-A	250V	130A	382x180x125*438	M8	M12	D
370LF	145A	FT-21501SO-A	250V	150A	430x210x150*461	M10	M10	E
450LF	182A	FT-22001SO-A	250V	200A	430x210x150*461	M10	M10	E
550LF	220A	FT-22501SO-A	250V	250A	430x210x150*461	M10	M10	E
440V								
055HF	12A	FT-40201SO-A	450V	20A	210x120x70*239	M6	M6	B
075HF	16A	FT-40201SO-A	450V	20A	210x120x70*239	M6	M6	B
110HF	23A	FT-40301SO-A	450V	30A	210x120x70*239	M6	M6	B
150HF	32A	FT-40401SO-A	450V	40A	210x120x70*239	M6	M6	B
185HF	38A	FT-40401SO-A	450V	40A	210x120x70*239	M6	M6	B
220HF	48A	FT-40501SO-A	450V	50A	210x120x70*239	M6	M6	B
300HF	58A	FT-40601SO-A	440V	60A	210x120x70*239	M6	M6	B
370HF	75A	FT-40801SO-A	440V	80A	280x160x100*348	M6	M12	C
450HF	90A	FT-41001SO-A	440V	100A	382x180x125*438	M8	M12	D
550HF	110A	FT-41201SO-A	440V	120A	382x180x125*438	M8	M12	D
750HF	149A	FT-41501SO-A	440V	150A	430x210x150*461	M10	M10	E
900HF	176A	FT-41801SO-A	440V	180A	430x210x150*461	M10	M10	E
1100HF	217A	FT-42201SO-A	440V	220A	430x210x150*461	M10	M10	E
1320HF	260A	FT-42601SO-A	440V	260A	430x210x150*461	M10	M10	E

Regenerative Braking Unit

■ Specification

Voltage		200 V Class										400 V Class										
Model Name		BRD-E			BRD-K3							BRD-EZ			BRD-VZ3							
		150L	220L		150L	220L		370L		550L		150H	220H		150H	220H		370H		550H		750H
Applicable Motor Capacity (kW)		15	19	22	15	18.5	22	30	37	45	55	15	18.5	22	15	19	22	30	37	45	55	75
DC Voltage (P-N)		DC 400V										DC 800V										
Operating Voltage (P-N)		362 ± 5V										725 ± 5V										
Average Braking Torque		150%			130%							150%			130%							
Allowable Braking Rate		10%			20~30%							10%			20~30%							
External Resistor	Resistor Value (Ω)	6.7	4.6	4.6	8.7	6.0	6.0	3.5	3.5	2.4	2.4	27	18.4	18.4	30.0	20.0	20.0	12.0	12.0	8.0	8.0	6.0
	Heavy-duty/Wattage (kW)	-	-	-	4.5	5.6	6.6	9.0	11.2	13.5	16.5	-	-	-	4.5	5.6	6.6	9.0	11.2	13.5	16.5	22.5
	Normal-duty/Wattage (kW)	2.5	3.0	4.0	2.5	3.0	4.0	5.0	6.0	7.0	8.5	2.5	3.0	4.0	2.5	3.0	4.0	5.0	6.0	7.0	8.5	11.0
Output Signal		Heatsink overheat trip signals																				
Protective Function		Output shut-down by Heatsink overheat, Short circuit, Overvoltage																				
External Dimension		A			B							A			B							
Environmental Conditions	Ambient Temperature	-10℃ ~ 40℃																				
	Humidity	90% RH (Non-condensing)																				
	Location	Less than 1,000m of altitude, indoors (no corrosive gas nor dust)																				
	Cooling Method	Self-cooling																				

■ Dimension

Unit: mm

• BRD-E & EZ (A)

BRD-E Series(200V 15~55kW)
BRD-EZ Series(400V 15~22kW)

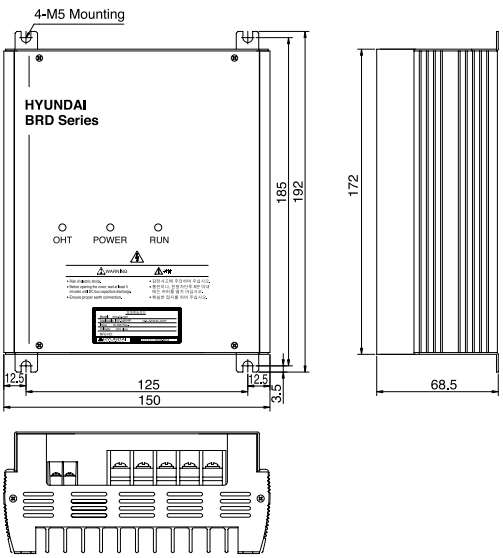

• BRD-K3 & VZ3 (B)

BRD-K3 Series(200V 15~55kW)
BRD-VZ3 Series(400V 15~75kW)

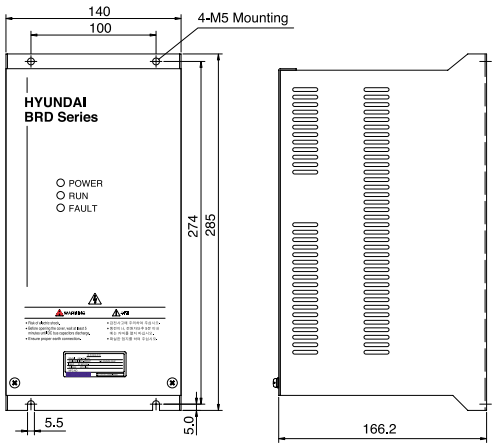

Braking Resistor

RB0, RB1, RB2, RB3

■ Specification

Model	Rated capacity	Resistance	Continuous ON time rating	Power consumption	Overheat protection	See
RBO	200 W	180 Ω ±5%	10 sec max.	0.7 kW instantaneously 200 W rated	Incorporating a themal relay in the resistor, outputs "Open"( )NC contact) signal at an excessive temperature Contact rating : 240 V AC, 3 A at resistive load or 0.2 A at inductive load. 36 V DC, 2 A at resistive load.	Fig.1
RB1	300 W	50 Ω ±5%	10 sec max.	2.6 kW instantaneously 300 W rated		Fig.2
RB2	600 W	35 Ω ±5%	10 sec max.	3.8 kW instantaneously 600 W rated		Fig.3
RB3	1,200 W	17 Ω ±5%	10 sec max.	7.7 kW instantaneously 1.2 kW rated		Fig.4

Unit: mm

(Fig.1) RB0

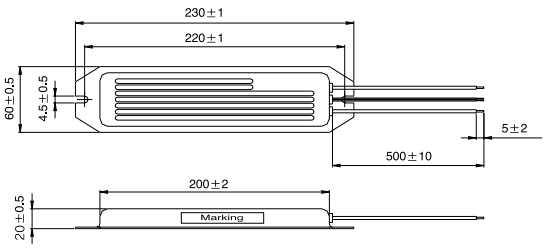

(Fig.2) RB1

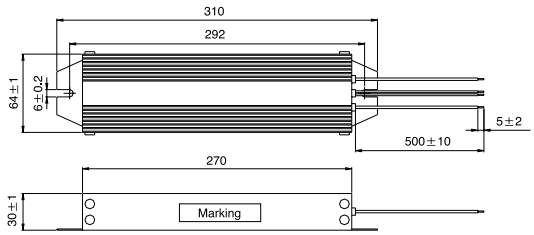

(Fig.3) RB2

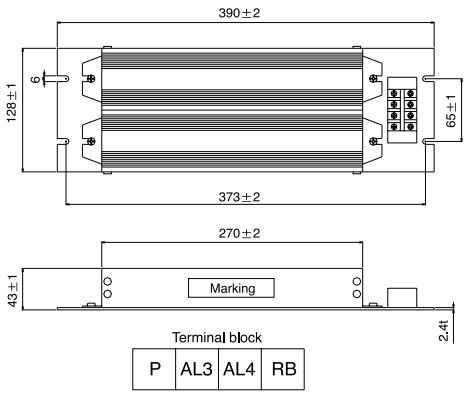

(Fig.4) RB3

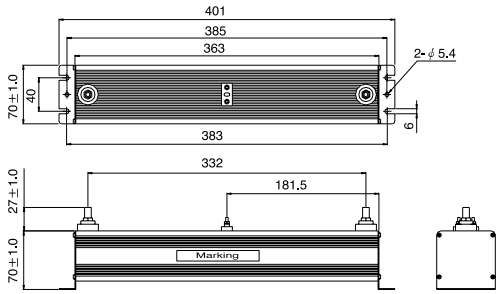

Torque Characteristics

- High starting torque of 200% or greater at 0.5 Hz
- Continuous operating torque of 100% with 1:10 speed range.

■ Short Period Operating Torque

● Base frequency 60 Hz

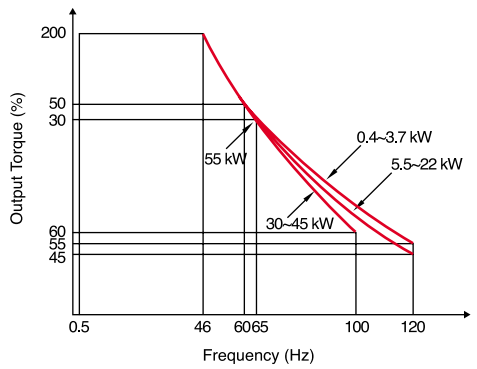

〈Sensorless vector control〉

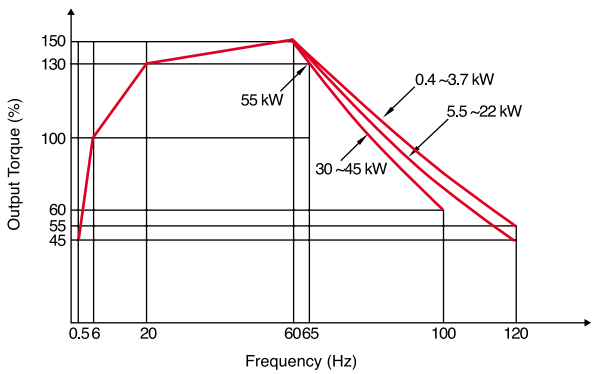

〈V/F control〉 (Maximum of torque boost)

● Base frequency 50 Hz

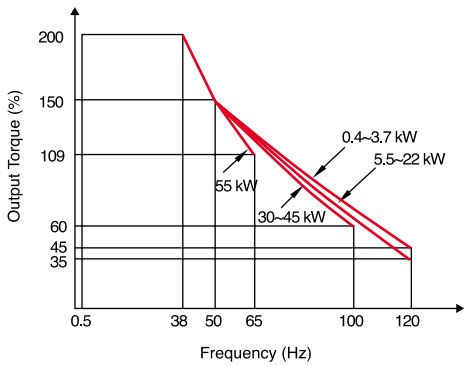

〈Sensorless vector control〉

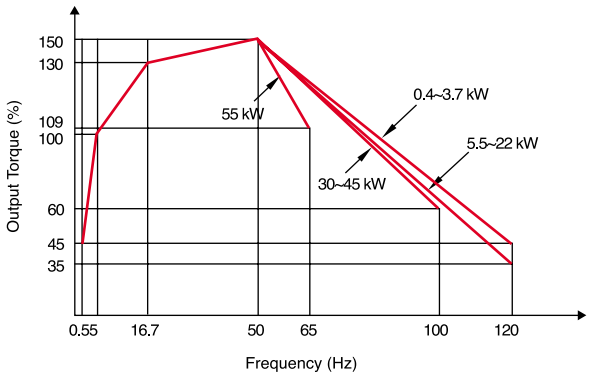

〈V/F control〉 (Maximum of torque boost)

■ **Continuous Operating Torque**

● Base frequency 60 Hz

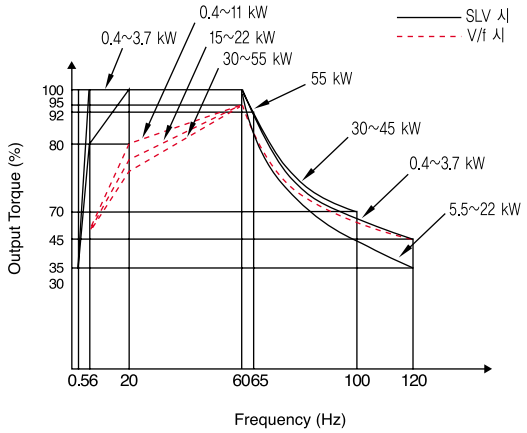

● Base frequency 50 Hz

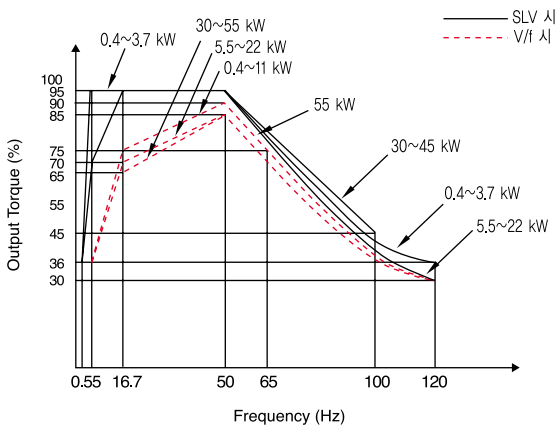

Temperature Derating Characteristics

· The ambient temperature surrounding the inverter should not exceed the allowable temperature range(-10 to 50℃)

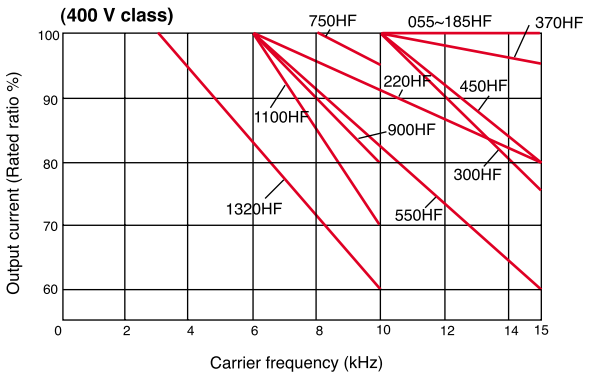

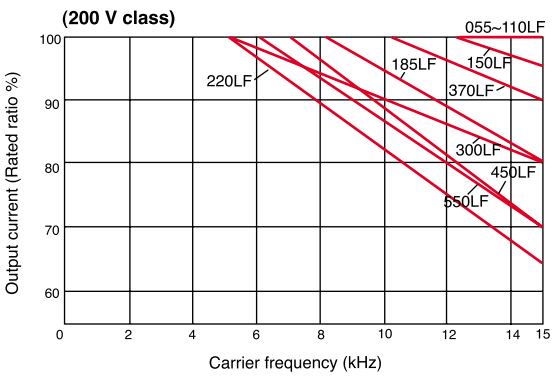

※ Ambient temperature 50℃, the condition of derating: Input voltage 240/460 V

For Correct Operation

- Before use, be sure to read through the Instruction Manual to insure proper use of the inverter.
- Note that the inverter requires electrical wiring; a trained specialist should carry out the wiring.
- The inverter in this catalog is designed for general industrial applications. For special applications in fields such as aircraft, nuclear power, transport vehicles, clinics, and underwater equipment, please consult with us in advance.
- For application in a facility where human life is involved or serious losses may occur, make sure to provide safety devices to avoid a serious accident.
- The inverter is intended for use with a three-phase AC motor. For use with a load other than this, please consult with us.

■ Application to Motors: Application to General-purpose Motors

Operating frequency	The overspeed endurance of a general-purpose motor is 120% of the rated speed for 2 minutes (JIS C4,004). For operation at higher than 60Hz, it is required to examine the allowable torque of the motor, useful life of bearings, noise, vibration, etc. In this case, be sure to consult the motor manufacturer as the maximum allowable rpm differs depending on the motor capacity, etc.
Torque characteristics	The torque characteristics of driving a general-purpose motor with an inverter differ from those of driving it using commercial power (starting torque decreases in particular). Carefully check the load torque characteristic of a connected machine and the driving torque characteristic of the motor.
Motor loss and temperature increase	An inverter-driven general-purpose motor heats up quickly at lower speeds. Consequently, the continuous torque level (output) will decrease at lower motor speeds. Carefully check the torque characteristics vs speed range requirments.
Noise	When run by an inverter, a general-purpose motor generates noise slightly greater than with commercial power.
Vibration	When run by an inverter at variable speeds, the motor may generate vibration, especially because of (a) unbalance of the rotor including a connected machine, or (b) resonance caused by the natural vibration frequency of a mechanical system. Particularly, be careful of (b) when operating at variable speeds a machine previously fitted with a constant speed motor. Vibration can be minimized by (1) avoiding resonance points using the frequency jump function of the inverter, (2) using a tire-shaped coupling, or (3) placing a rubber shock absorber beneath the motor base.
Power transmission mechanism	Under continued, low-speed operation, oil lubrication can deteriorate in a power transmission mechanism with an oil type gear box (gear motor) or reducer. Check with the motor manufacturer for the permissible range of continuous speed. To operate at more than 60 Hz, confirm the machine's ability to withstand the centrifugal force generated.

■ Application to Motors: Application to Special Motors

Gear motor	The allowable rotation range of continuous drive varies depending on the lubrication method or motor manufacturer.(Particularly in case of oil lubrication, pay attention to the low frequency range.)
Brake-equipped motor	For use of a brake-equipped motor, be sure to connect the braking power supply from the primary side of the inverter.
Pole-change motor	There are different kinds of pole-change motors (constant output characteristic type, constant torque characteristic type, etc.), with different rated current values. In motor selection, check the maximum allowable current for each motor of a different pole count. At the time of pole change, be sure to stop the motor. Also see: Application to the 400 V class motor.
Submersible motor	The rated current of a submersible motor is significantly larger than that of the general-purpose motor. In inverter selection, be sure to check the rated current of the motor.
Explosion-proof motor	Inverter drive is not suitable for a safety-enhanced explosion-proof type motor. The inverter should be used in combination with a pressure-proof and explosion-proof type of motor.* Explosion-proof verification is not available for N300 series.
Synchronous (MS) motor High-speed(HFM) motor	In most cases, the synchronous (MS) motor and the high-speed (HFM) motor are designed and manufactured to meet the specifications suitable for a connected machine. As to proper inverter selection, consult the manufacturer.
Single-phase motor	A single-phase motor is not suitable for variable-speed operation by an inverter drive. Therefore, use a three-phase motor.

■ Application to Motors: Application to the 400 V-class Motor

A system applying a voltage-type PWM inverter with IGBT may have surge voltage at the motor terminals resulting from the cable constants including the cable length and the cable laying method. Depending on the surge current magnification, the motor coil insulation may be degraded. In particular, when a 400 V class motor is used, a longer cable is used, and critical loss can occur, take the following countermeasures:(1) install the LCR filter between the inverter and the motor,(2) install the AC reactor between the inverter and the motor, or (3) enhance the insulation of the motor coil.

■ Notes on Use: Drive

Run/ Stop	Run or stop of the inverter must be done with the keys on the operator panel or through the control circuit terminal. Do not operate by installing a electromagnetic contactor (Mg) in the main circuit.
Emergency motor stop	When the protective function is operating or the power supply stops, the motor enters the free run stop state. When an emergency stop is required or when the motor should be kept stopped, use of a mechanical brake should be considered.
High-frequency run	A max. 400Hz can be selected on the N300 series. However, a two-pole motor can attain up to approx. 24,000 rpm, which is extremely dangerous. Therefore, carefully make selection and settings by checking the mechanical strength of the motor and connected machines. Consult the motor manufacturer when it is necessary to drive a standard(general-purpose) motor above 60 Hz. A full line of high-speed motors is available from Hyundai.

■ Notes on Use: Installation Location and Operating Environment

Avoid installation in areas of high temperature, excessive humidity, or where moisture can easily collect, as well as areas that are dusty, subject to corrosive gases, mist of liquid for grinding, or salt. Install the inverter away from direct sunlight in a well-ventilated room that is free of vibration. The inverter can be operated in the ambient temperature range from -10℃ to 50℃ (Carrier frequency and output current must be reduced in the range of 40℃ to 50℃)

■ Notes on Use: Main Power Supply

Installation of an AC reactor on the input side	In the following examples involving a general-purpose inverter, a large peak current flows on the main power supply side, and is able to destroy the converter module. Where such situations are foreseen or the connected equipment must be highly reliable, install an AC reactor between the power supply and the inverter. Also, where influence of indirect lightning strike is possible, install a lightning conductor. (A) The unbalance factor of the power supply is 3% or higher. (Note) (B) The power supply capacity is at least 10 times greater than the inverter capacity (the power supply capacity is 500 kVA or more). (C) Abrupt power supply changes are expected. Examples: (1) Several inverters are interconnected with a short bus. (2) A thyristor converter and an inverter are interconnected with a short bus. (3) An installed phase advance capacitor opens and closes. In cases (A), (B) and (C), it is recommended to install an AC reactor on the main power supply side. Note: Example calculation with VRS=205 V, VST=201 V, VTR=200 VVRS: R-S line voltage, VST: S-T line voltage, VTR: T-R line voltage $\text{Unbalance factor of voltage} = \frac{\text{Max. line voltage (min.)} - \text{Mean line voltage}}{\text{Mean line voltage}}$ $= \frac{V_{RS}-(V_{RS}+V_{ST}+V_{TR})/3}{(V_{RS}+V_{ST}+V_{TR})/3} \times 100 = \frac{205-202}{202} \times 100 = 1.5(\%)$
Using a private power generator	An inverter run by a private power generator may overheat the generator or suffer from a deformed output voltage wave form of the generator. Generally, the generator capacity should be five times that of the inverter (kVA) in a PWM control system, or six times greater in a PAM control system.

■ Notes on Peripheral Equipment Selection

Wiring connections		(1) Be sure to connect main power wires with R(L1), S(L2), and T(L3) (input) terminals and motor wires to U(T1), V(T2), And W(T3) terminals (output). (Incorrect connection will cause an immediate failure.) (2) Be sure to provide a grounding connection with the ground terminal (⏚).
Wiring between inverter and motor	Electromagnetic contactor	When an electromagnetic contactor is installed between the inverter and the motor, do not perform on-off switching during running operation.
	Thermal relay	When used with standard applicable output motors (standard three-phase squirrel cage four pole motors), the N300 series does not need a thermal relay for motor protection due to the internal electronic protective circuit. A thermal relay, however, should be used: during continuous running outside a range of 30 Hz to 60 Hz for motors exceeding the range of electronic thermal adjustment (rated current). When several motors are driven by the same inverter, install a thermal relay for each motor. The RC value of the thermal relay should be more than 1.1 times the rated current of the motor. Where the wiring length is 10m or more, the thermal relay tends to turn off readily. In this case, provide an AC reactor on the output side or use a current sensor.
Installing a circuit breaker		Install a circuit breaker on the main power input side to protect inverter wiring and ensure personal safety. Choose an inverter-compatible circuit breaker. The conventional type may malfunction due to harmonics from the inverter. For more information, consult the circuit breaker manufacturer.
Wiring distance		The wiring distance between the inverter and the remote operator panel should be 20 meters or less. When this distance is exceeded, use CVD-E (current-voltage converter) or RCD-E (remote control device). Shielded cable should be used on the wiring. Beware of voltage drops on main circuit wires. (A large voltage drop reduces torque.)
Earth leakage relay		If the earth leakage relay (or earth leakage breaker) is used, it should have a sensitivity level of 15mA or more (per inverter).
Phase advance capacitor		Do not use a capacitor for power factor improvement between the inverter and the motor because the high-frequency components of the inverter output may overheat or damage the capacitor

■ High-frequency Noise and Leakage Current

(1) High-frequency components are included in the input/output of the inverter main circuit, and they may cause interference in a transmitter, radio, or sensor if used near the inverter. The interference can be minimized by attaching noise filters(option) in the inverter circuitry.
(2) The switching action of an inverter causes an increase in leakage current. Be sure to ground the inverter and the motor.

■ Lifetime of Primary Parts

Because a DC bus capacitor deteriorates as it undergoes internal chemical reaction, it should normally be replaced every five years. Be aware, however, that its life expectancy is considerably shorter when the inverter is subjected to such adverse factors as high temperatures or heavy loads exceeding the rated current of the inverter.The approximate lifetime of the capacitor is as shown in the figure at the right when it is used 12 hours daily(according to the "Instructions for Periodic Inspection of General-Purpose Inverter" (JEMA)). Also, such moving parts as a cooling fan should be replaced. Maintenance inspection and parts replacement must be performed by only specified trained personnel.

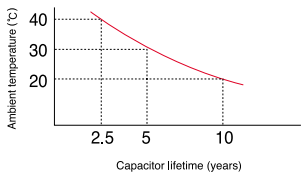

HHIS-WC-CE-B12-06, 2007.10 Designed by ADPARK

www.hyundai-elec.com

We build a better future
HYUNDAI HEAVY INDUSTRIES CO.,LTD. | ELECTRO ELECTRIC SYSTEMS

Head Office	1 Jeonha-dong, Dong-gu, Ulsan, Korea TEL. 82-52-202-8101~8	FAX. 82-52-202-8100
Seoul (Sales & Marketing)	140-2, Gye-dong, Jongno-gu, Seoul, Korea TEL. 82-2-746-7596, 7519	FAX. 82-2-746-8448
Orlando	3452 Lake Lynda Drive, Suite 170, Orlando, Florida 32817, U.S.A. Tel. 1-407-249-7350	Fax. 1-407-275-4940
London	2nd Floor, The Triangle, 5-17 Hammersmith Grove London, W6 0LG, UK Tel. 44-20-8741-0501	Fax. 44-20-8741-5620
Tokyo	8th Fl., Yurakucho Denki Bldg.1-7-1, Yuraku-cho, Chiyoda-ku, Tokyo 100-0006, Japan Tel. 81-3-3212-2076, 3215-7159	Fax. 81-3-3211-2093
Dubai	Room 6206, Al Bustan Centre Al Qusais P.O.Box 252458 Dubai, U.A.E. Tel. 971-4-263-9071	Fax. 971-4-263-9072
Sofia	1271, Sofia 41, Rojen Blvd. Bulgaria Tel. 359-2-803-3200	Fax. 359-2-803-3203
Yangzhong	Lianzhong Avenue, Xinba Scientific and Technologic Zone, Yangzhong City, Jiangsu 212212, China Tel. 86-511-842-0666, 0500	Fax. 86-511-842-0668, 0231